THIS DRAWING IS UNPUBLISHED. RELEASED FOR PUBLICATION 20
© COPYRIGHT 20 BY - ALL RIGHTS RESERVED.

LOC	DIST
A1	-

REVISIONS

P	LTR	DESCRIPTION	DATE	DWN	APVD
	A	Initial release	19JUN2013	RG	RG
	B	ECR-24-201075	01MAR2024	BM	CH

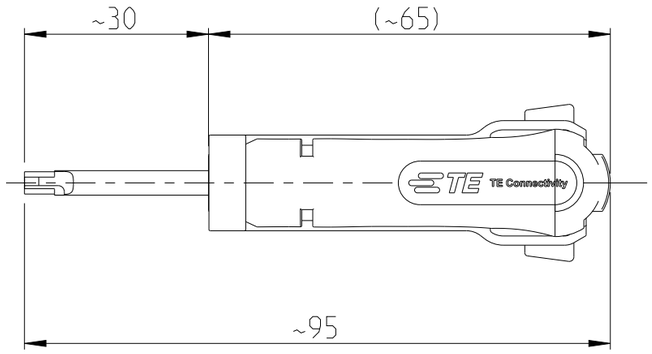

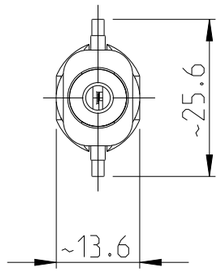

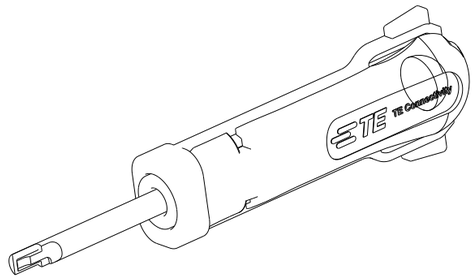

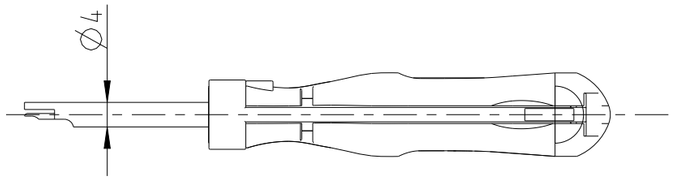

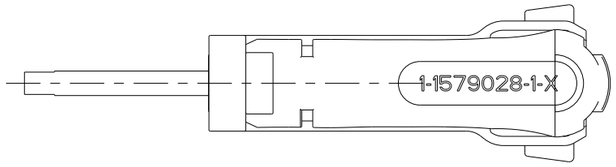

Anwendungsbereich /Application range

Contact: MCON 1.2 clean body P/N 1534326

Housing: P/N 2208848,
specifically for contact cavity 21 to 24

THIS DRAWING IS A CONTROLLED DOCUMENT.

DIMENSIONS: mm

TOLERANCES UNLESS OTHERWISE SPECIFIED:
0 PLC ±-
1 PLC ±-
2 PLC ±-
3 PLC ±-
4 PLC ±-
ANGLES ±1°

MATERIAL -
FINISH -

DWN R. Germann 19JUN2013
CHK R. Germann 19JUN2013
APVD - -
PRODUCT SPEC -
APPLICATION SPEC -
WEIGHT 16g

TE Connectivity

NAME EXTRACTION TOOL
-
-

SIZE	CAGE CODE	DRAWING NO	RESTRICTED TO
A3	00779	C-1-1579028-1	-

Customer Drawing | SCALE 1:1 | SHEET 1 OF 1 | REV B