THIS DRAWING IS UNPUBLISHED. RELEASED FOR PUBLICATION 20
© COPYRIGHT 20 BY - ALL RIGHTS RESERVED.

REVISIONS

P	LTR	DESCRIPTION	DATE	DWN	APVD
	B1	ECR-18-008476	08JUN2018	G.W	C.W
	B2	ECR-18-009727	22JUN2018	G.W	C.W
	C	ECR-19-009136	23OCT2019	C.D	C.W
	D	ECR-25-235343	28OCT2025	G.W	C.W

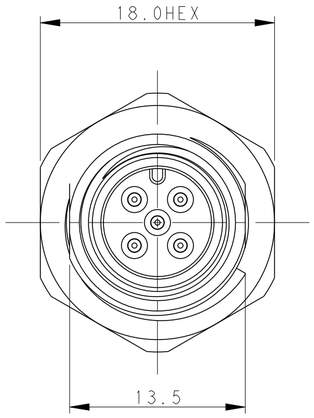

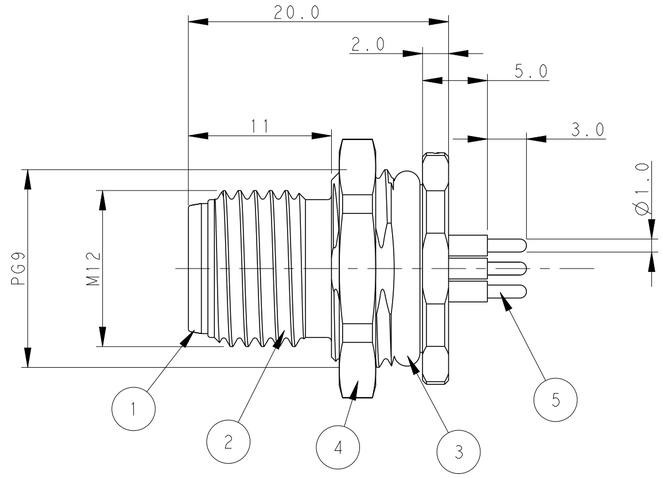

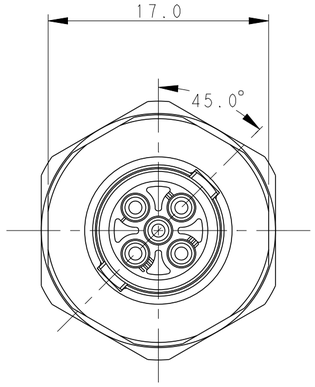

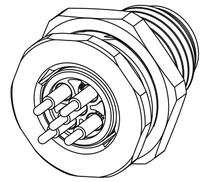

TABLE 1

TECHNICAL DATA	T4140012021-000	T4140012031-000	T4140012041-000	T4140012051-000
RATED VOLTAGE	250V	250V	250V	60V
RATED CURRENT	4A	4A	4A	4A
POLLUTION DEGREE	3	3	3	3
OVERVOLTAGE CATEGORY	II	II	II	II
CONTACT RESISTANCE	<=10mΩ	<=10mΩ	<=10mΩ	<=10mΩ
INSULATION RESISTANCE	>100MΩ	>100MΩ	>100MΩ	>100MΩ
DEGREE OF PROTECTION	IP67	IP67	IP67	IP67
OPERATION TEMPERATURE	-40~85°C	-40~85°C	-40~85°C	-40~85°C

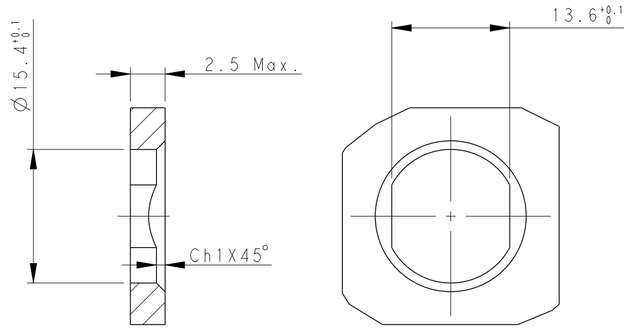

RECOMMENDED PANEL CUTOUT

NOTE:
1. TECHNICAL DATA: SEE TABLE 1
2. RECOMMENDED MOUNT PANEL SEE DETAIL
3. PACKAGING:1 PIECE IN A BAG
4. ALL DIMENSIONS ARE FOR NOMINAL REFERENCE ONLY UNLESS OTHERWISE STATED

注释：：
1. 技术参数，见表1
2. 推荐开孔尺寸详见如图所示
3. 包装：1PCS/袋
4. 所有尺寸仅供参考，除非另有说明

T41400120X1-000
- CONTACT FINISH:
  - 1; GOLD 3u''
- NUMBER OF PINS:
  - 02: 2 PINS
  - 03: 3 PINS
  - 04: 4 PINS
  - 05: 5 PINS

T41400120X1-000
- 端子电镀：
  - 1: 3u''金
- 针数：
  - 02: 2 针
  - 03: 3 针
  - 04: 4 针
  - 05: 5 针

PIN ARRANGEMENT
A-CODE

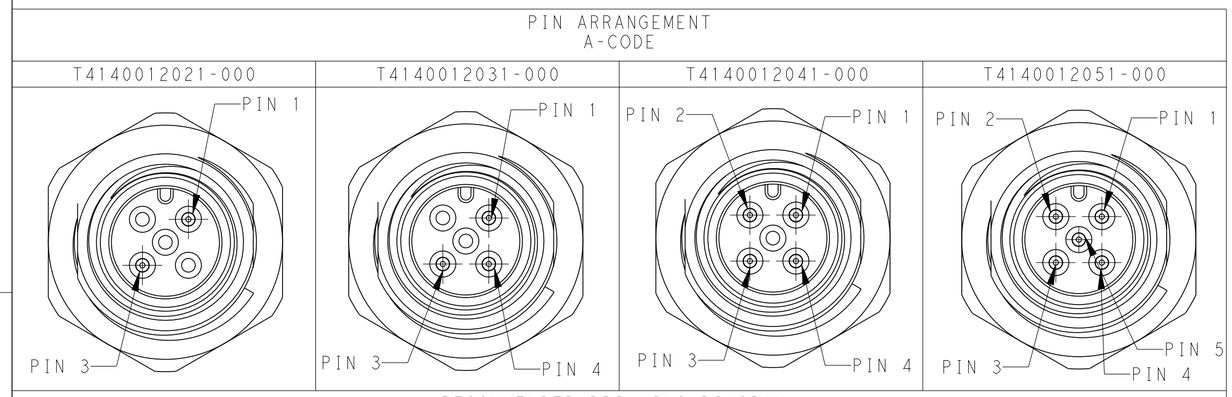

RECOMMENDED DRILLING DIAGRAM

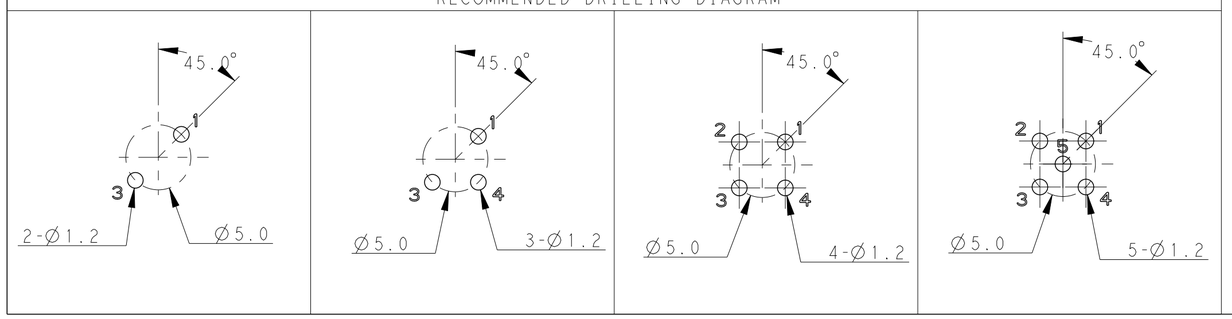

TE PN	TYPE
T4140012021-000	RPC-M12-MF-2CON-PG9-LBU
T4140012031-000	RPC-M12-MF-3CON-PG9-LBU
T4140012041-000	RPC-M12-MF-4CON-PG9-LBU
T4140012051-000	RPC-M12-MF-5CON-PG9-LBU

PLATING	MATERIAL	DESCRIPTION	ITEM	T4140012021-000	T4140012031-000	T4140012041-000	T4140012051-000
GOLD PLATED	BRONZE	CONTACT	5	2	3	4	5
NICKEL PLATED	BRASS	METAL NUT	4	1	1	1	1
BLACK	RUBBER	O-RING	3	1	1	1	1
NICKEL PLATED	ZAMAK	M12,MALE,METAL BODY	2	1	1	1	1
BLACK	PA66	M12,MALE HSG	1	1	1	1	1

THIS DRAWING IS A CONTROLLED DOCUMENT.

DIMENSIONS: mm

TOLERANCES UNLESS OTHERWISE SPECIFIED:
0 PLC ±-
1 PLC ±0.2
2 PLC ±0.2
3 PLC ±0.2
4 PLC ±-
ANGLES ±-

MATERIAL -
FINISH -

DWN BO GAO 01FEB2016
CHK KOBBY ZHAO 01FEB2016
APVD XIANG XU 01FEB2016
PRODUCT SPEC 108-106140
APPLICATION SPEC 114-137144
WEIGHT -

TE Connectivity

NAME M12 PANEL MOUNT CONNECTOR A CODE, MALE, REAR MOUNTING PCB SOLDERING

SIZE A2 | CAGE CODE - | DRAWING NO C-T41400120X1000 | RESTRICTED TO -

CUSTOMER DRAWING | SCALE 3:1 | SHEET 1 OF 1 | REV D

1471-9 (3/13)