THIS DRAWING IS UNPUBLISHED. RELEASED FOR PUBLICATION 20
© COPYRIGHT 20 BY - ALL RIGHTS RESERVED.

REVISIONS

P	LTR	DESCRIPTION	DATE	DWN	APVD
	A1	ECR-16-012641	12SEP2016	BS	CW
	A2	ECR-18-009192	13JUL2018	KW	CW
	B	ECR-20-008190	20OCT2020	WQR	CW
	B1	ECR-21-105138	30JUN2021	WQR	CW

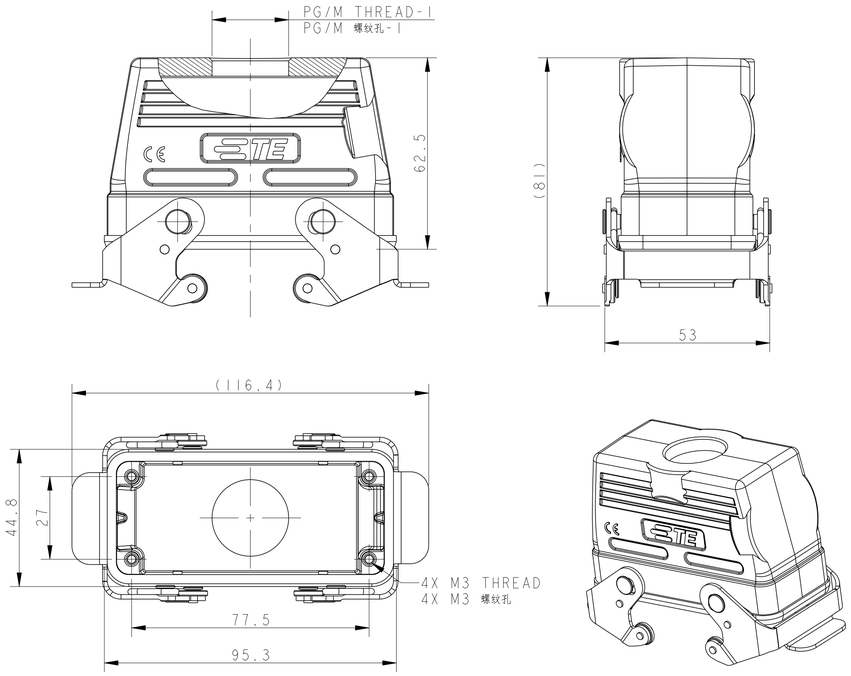

TYPE 1: LOW CONSTRUCTION + STAINLESS STEEL DOUBLE LOCKING
类型1： 低结构壳体+不锈钢双扣

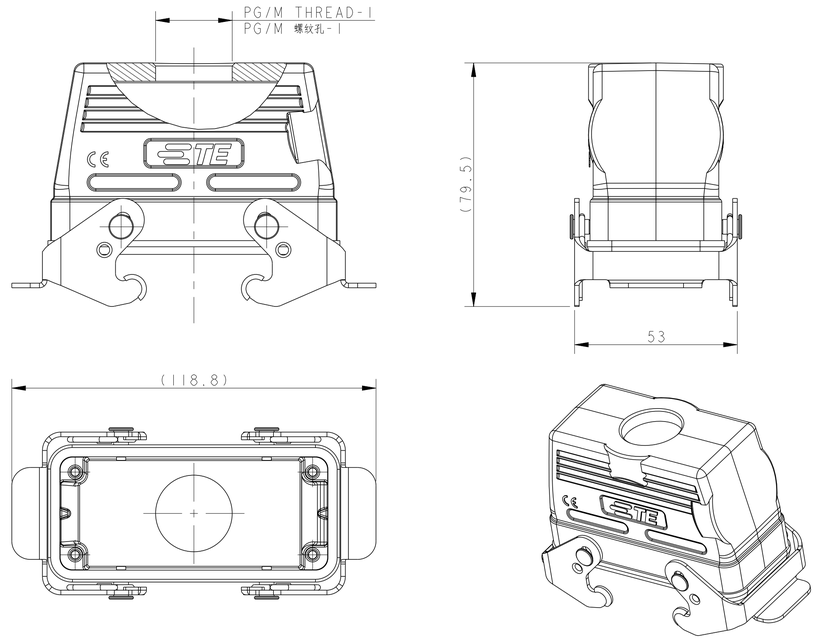

TYPE 2: LOW CONSTRUCTION + METAL DOUBLE LOCKING
OTHER SPEC REFER TO TYPE 1
类型2： 低结构壳体+彩锌双扣，其他规格参照类型1

NOTES:
1. TECHNICAL CHARACTERISTICS:
HOUSING MATERIAL: DIE CAST ALUMINIUM ALLOY
SURFACE TREATMENT: POWDER COATED, GRAY
DEGREE OF PROTECTION: IP65 (MATED)

注释：
1. 技术参数：
壳体材料： 铝合金
表面处理： 灰色粉末喷涂
防护等级： IP65(配合)

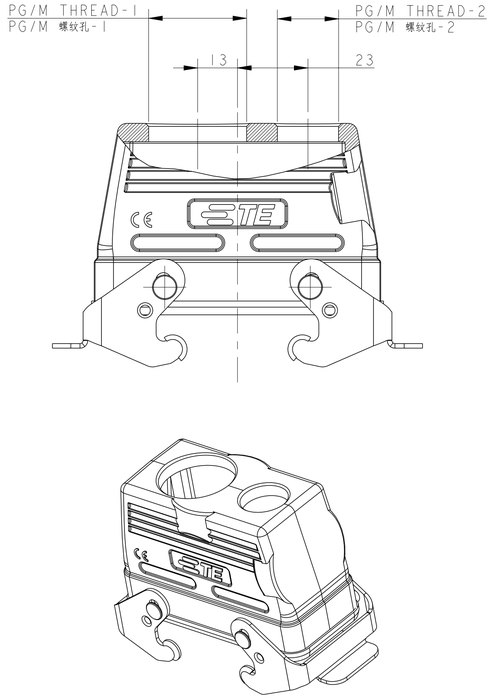

TYPE 3: LOW CONSTRUCTION + METAL DOUBLE LOCKING
2 ENTRY HOLE
OTHER SPEC REFER TO TYPE 2
类型3： 低结构壳体+彩锌双扣，2个进线孔，其他规格参照类型2

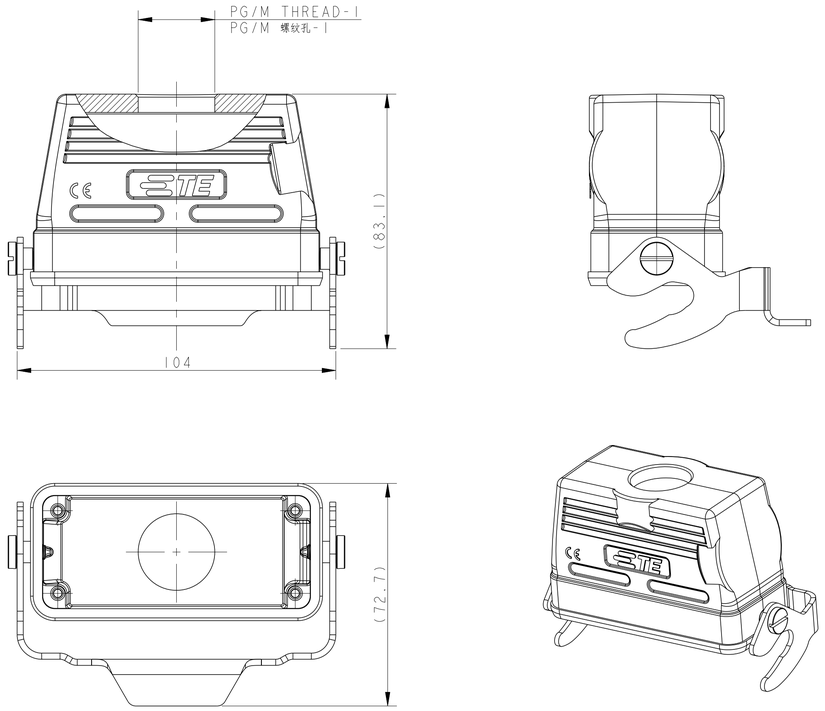

TYPE 4: LOW CONSTRUCTION + METAL SINGLE LOCKING
OTHER SPEC REFER TO TYPE 1
类型4： 低结构壳体+彩锌单扣，其他规格参照类型1

PART NUMBER 料号	PART DESCRIPTION 描述		PG/M THREAD-1 PG/M 螺纹孔-1	PG/M THREAD-2 PG/M 螺纹孔-2	TYPE 类型
T1710161116-000	H16B-TBFS-PG16	H16B HOUSING, CABLE-TO-CABLE, STAINLESS STEEL DOUBEL LOCKING, TOP ENTRY PG16, LOW CONSTRUCTION, POWDER COATED, GRAY H16B下壳，电缆对接，不锈钢双扣，顶出PG16，低结构，灰色粉末喷涂	PG16	-	TYPE 1
T1710161120-000	H16B-TBFS-M20	H16B HOUSING, CABLE-TO-CABLE, STAINLESS STEEL DOUBEL LOCKING, TOP ENTRY M20, LOW CONSTRUCTION, POWDER COATED, GRAY H16B下壳，电缆对接，不锈钢双扣，顶出M20，低结构，灰色粉末喷涂	M20	-	
T1710161121-000	H16B-TBFS-PG21	H16B HOUSING, CABLE-TO-CABLE, STAINLESS STEEL DOUBEL LOCKING, TOP ENTRY PG21, LOW CONSTRUCTION, POWDER COATED, GRAY H16B下壳，电缆对接，不锈钢双扣，顶出PG21，低结构，灰色粉末喷涂	PG21	-	
T1710161125-000	H16B-TBFS-M25	H16B HOUSING, CABLE-TO-CABLE, STAINLESS STEEL DOUBEL LOCKING, TOP ENTRY M25, LOW CONSTRUCTION, POWDER COATED, GRAY H16B下壳，电缆对接，不锈钢双扣，顶出M25，低结构，灰色粉末喷涂	M25	-	
T1710162113-000	H16B-TBF-PG13.5	H16B HOUSING, CABLE-TO-CABLE, METAL DOUBLE LOCKING, TOP ENTRY PG13.5, LOW CONSTRUCTION, POWDER COATED, GRAY H16B下壳，电缆对接，彩锌双扣，顶出PG13.5，低结构，灰色粉末喷涂	PG13.5	-	TYPE 2
T1710162129-000	H16B-TBF-PG29	H16B HOUSING, CABLE-TO-CABLE, METAL DOUBLE LOCKING, TOP ENTRY PG29, LOW CONSTRUCTION, POWDER COATED, GRAY H16B下壳，电缆对接，彩锌双扣，顶出PG29，低结构，灰色粉末喷涂	PG29	-	
T1710162121-000	H16B-TBF-PG21	H16B HOUSING, CABLE-TO-CABLE, METAL DOUBLE LOCKING, TOP ENTRY PG21, LOW CONSTRUCTION, POWDER COATED, GRAY H16B下壳，电缆对接，彩锌双扣，顶出PG21，低结构，灰色粉末喷涂	PG21	-	
T1710162125-000	H16B-TBF-M25	H16B HOUSING, CABLE-TO-CABLE, METAL DOUBLE LOCKING, TOP ENTRY M25, LOW CONSTRUCTION, POWDER COATED, GRAY H16B下壳，电缆对接，彩锌双扣，顶出M25，低结构，灰色粉末喷涂	M25	-	
T1710162132-000	H16B-TBF-M32	H16B HOUSING, CABLE-TO-CABLE, METAL DOUBLE LOCKING, TOP ENTRY M32, LOW CONSTRUCTION, POWDER COATED, GRAY H16B下壳，电缆对接，彩锌双扣，顶出M32，低结构，灰色粉末喷涂	M32	-	
T1710161632-000	H16B-TBF-M32/M16	H16B HOUSING, CABLE-TO-CABLE, METAL DOUBLE LOCKING, TOP ENTRY M32 AND M16, LOW CONSTRUCTION, POWDER COATED, GRAY H16B下壳，电缆对接，彩锌双扣，顶出M32和M16，低结构，灰色粉末喷涂	M32	M16	TYPE 3
T1710162032-000	H16B-TBF-M32/M20	H16B HOUSING, CABLE-TO-CABLE, METAL DOUBLE LOCKING, TOP ENTRY M32 AND M20, LOW CONSTRUCTION, POWDER COATED, GRAY H16B下壳，电缆对接，彩锌双扣，顶出M32和M20，低结构，灰色粉末喷涂	M32	M20	
T1730163121-000	H16B-TBF-LB-PG21	H16B HOUSING, CABLE-TO-CABLE, METAL SINGLE LOCKING, TOP ENTRY PG21, LOW CONSTRUCTION, POWDER COATED, GRAY H16B下壳，电缆对接，彩锌单扣，顶出PG21，低结构，灰色粉末喷涂	PG21	-	TYPE 4
T1730163125-000	H16B-TBF-LB-M25	H16B HOUSING, CABLE-TO-CABLE, METAL SINGLE LOCKING, TOP ENTRY M25, LOW CONSTRUCTION, POWDER COATED, GRAY H16B下壳，电缆对接，彩锌单扣，顶出M25，低结构，灰色粉末喷涂	M25	-	
T1730163132-000	H16B-TBF-LB-M32	H16B HOUSING, CABLE-TO-CABLE, METAL SINGLE LOCKING, TOP ENTRY M32, LOW CONSTRUCTION, POWDER COATED, GRAY H16B下壳，电缆对接，彩锌单扣，顶出M32，低结构，灰色粉末喷涂	M32	-	

THIS DRAWING IS A CONTROLLED DOCUMENT.

DIMENSIONS: mm

TOLERANCES UNLESS OTHERWISE SPECIFIED:
0 PLC ±
1 PLC ±
2 PLC ±
3 PLC ±
4 PLC ±
ANGLES ±

MATERIAL: TBD
FINISH: -

DWN DAVID.LI 06JUL2015
CHK CHRIS.WANG 06JUL2015
APVD XIANG.XU 06JUL2015
PRODUCT SPEC 108-137013
APPLICATION SPEC 114-137013
WEIGHT -

TE Connectivity

NAME H16B-TBFS/TBF/TBF-LB-PG/M

SIZE A1 | CAGE CODE - | DRAWING NO C-T17X016XXXX000 | RESTRICTED TO

CUSTOMER DRAWING | SCALE 1:2 | SHEET 1 OF 2 | REV B1

printed on 2 Jul 2021 10:21 (China Standard Time) from TE3436646

THIS DRAWING IS UNPUBLISHED. RELEASED FOR PUBLICATION 20
© COPYRIGHT 20 BY - ALL RIGHTS RESERVED.

NOTES:
SEE SHEET 1.
注释：
见第1页

REVISIONS					
P	LTR	DESCRIPTION	DATE	DWN	APVD
	-	SEE SHEET 1	-	-	-

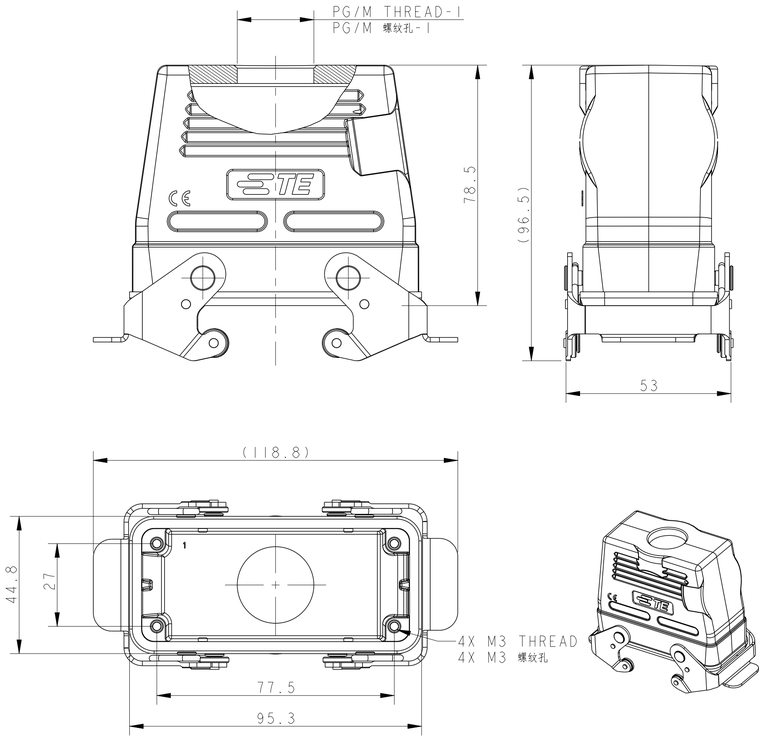

TYPE 5: HIGH CONSTRUCTION + STAINLESS STEEL DOUBLE LOCKING
类型5： 高结构壳体+不锈钢双扣

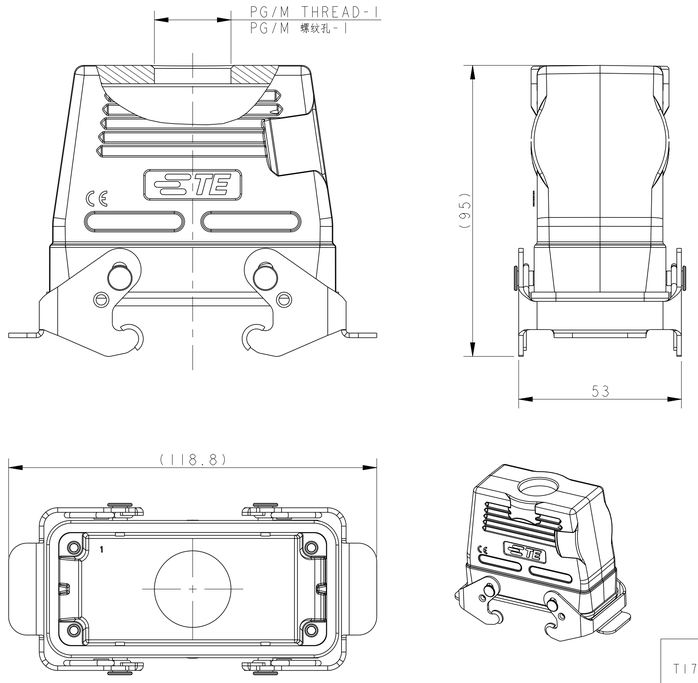

TYPE 6: HIGH CONSTRUCTION + METAL DOUBLE LOCKING
OTHER SPEC REFER TO TYPE 5
类型6： 高结构壳体+彩锌双扣，其他规格参照类型5

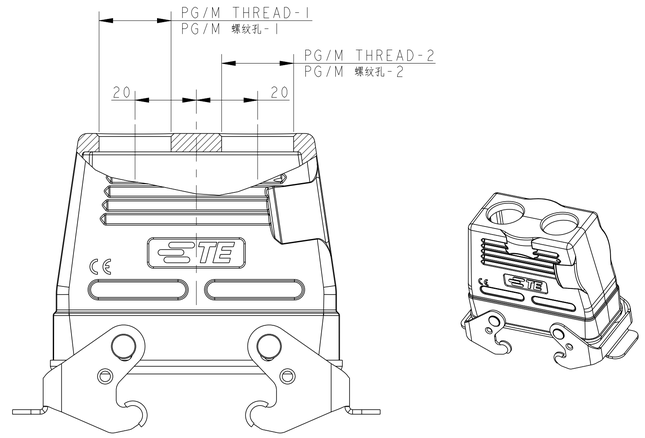

TYPE 7: HIGH CONSTRUCTION + METAL DOUBLE LOCKING
2 ENTRY HOLE
OTHER SPEC REFER TO TYPE 6
类型7： 高结构壳体+彩锌双扣，2个进线孔，其他规格参照类型6

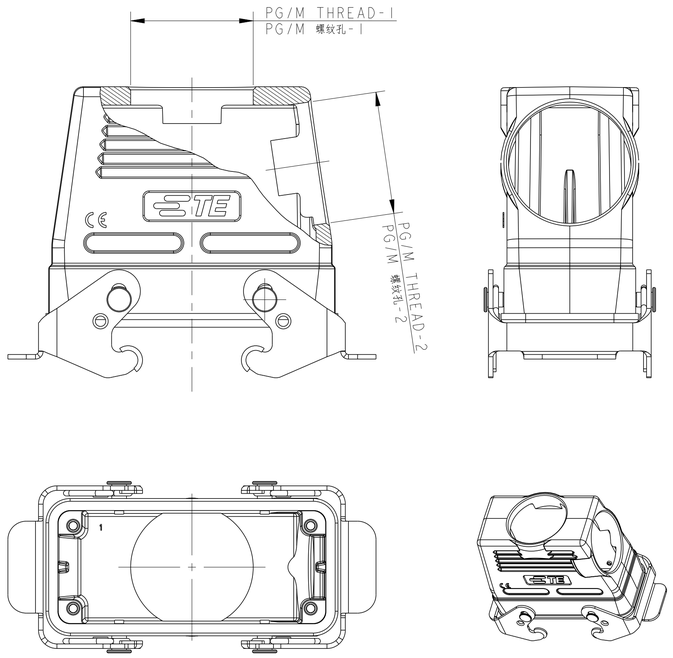

TYPE 8: HIGH CONSTRUCTION + METAL DOUBLE LOCKING
2 ENTRY HOLE
OTHER SPEC REFER TO TYPE 6
类型8： 高结构壳体+彩锌双扣，2个进线孔，其他规格参照类型6

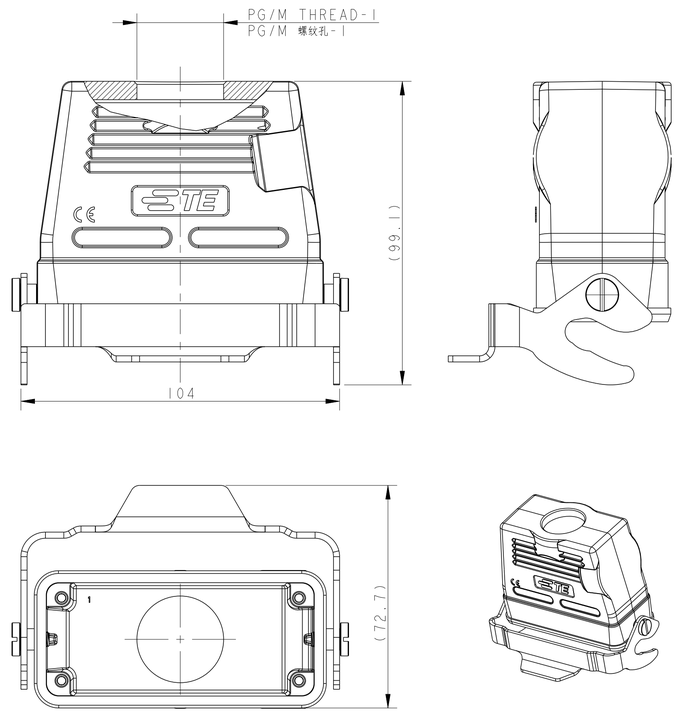

TYPE 9: HIGH CONSTRUCTION + METAL SINGLE LOCKING
OTHER SPEC REFER TO TYPE 5
类型9： 高结构壳体+彩锌单扣，其他规格参照类型5

PART NUMBER 料号	PART DESCRIPTION 描述	PG/M THREAD-1 PG/M 螺纹孔-1	PG/M THREAD-2 PG/M 螺纹孔-2	TYPE 类型
TI750161121-000	HI6B-TBFHS-PG21 HI6B HOUSING, CABLE-TO-CABLE, STAINLESS STEEL DOUBEL LOCKING, TOP ENTRY PG21, HIGH CONSTRUCTION, POWDER COATED, GRAY HI6B下壳，电缆对接，不锈钢双扣，顶出PG21，高结构，灰色粉末喷涂	PG21	-	TYPE 5
TI750161129-000	HI6B-TBFHS-PG29 HI6B HOUSING, CABLE-TO-CABLE, STAINLESS STEEL DOUBEL LOCKING, TOP ENTRY PG29, HIGH CONSTRUCTION, POWDER COATED, GRAY HI6B下壳，电缆对接，不锈钢双扣，顶出PG29，高结构，灰色粉末喷涂	PG29	-	
TI750161132-000	HI6B-TBFHS-M32 HI6B HOUSING, CABLE-TO-CABLE, STAINLESS STEEL DOUBEL LOCKING, TOP ENTRY M32, HIGH CONSTRUCTION, POWDER COATED, GRAY HI6B下壳，电缆对接，不锈钢双扣，顶出M32，高结构，灰色粉末喷涂	M32	-	
TI750162121-000	HI6B-TBFH-PG21 HI6B HOUSING, CABLE-TO-CABLE, METAL DOUBLE LOCKING, TOP ENTRY PG21, HIGH CONSTRUCTION, POWDER COATED, GRAY HI6B下壳，电缆对接，彩锌双扣，顶出PG21，高结构，灰色粉末喷涂	PG21	-	TYPE 6
TI750162125-000	HI6B-TBFH-M25 HI6B HOUSING, CABLE-TO-CABLE, METAL DOUBLE LOCKING, TOP ENTRY M25, HIGH CONSTRUCTION, POWDER COATED, GRAY HI6B下壳，电缆对接，彩锌双扣，顶出M25，高结构，灰色粉末喷涂	M25	-	
TI750162129-000	HI6B-TBFH-PG29 HI6B HOUSING, CABLE-TO-CABLE, METAL DOUBLE LOCKING, TOP ENTRY PG29, HIGH CONSTRUCTION, POWDER COATED, GRAY HI6B下壳，电缆对接，彩锌双扣，顶出PG29，高结构，灰色粉末喷涂	PG29	-	
TI750162132-000	HI6B-TBFH-M32 HI6B HOUSING, CABLE-TO-CABLE, METAL DOUBLE LOCKING, TOP ENTRY M32, HIGH CONSTRUCTION, POWDER COATED, GRAY HI6B下壳，电缆对接，彩锌双扣，顶出M32，高结构，灰色粉末喷涂	M32	-	
TI750162140-000	HI6B-TBFH-M40 HI6B HOUSING, CABLE-TO-CABLE, METAL DOUBLE LOCKING, TOP ENTRY M40, HIGH CONSTRUCTION, POWDER COATED, GRAY HI6B下壳，电缆对接，彩锌双扣，顶出M40，高结构，灰色粉末喷涂	M40	-	
TI750162221-000	HI6B-TBFH-2PG21 HI6B HOUSING, CABLE-TO-CABLE, METAL DOUBLE LOCKING, TOP ENTRY 2PG21, HIGH CONSTRUCTION, POWDER COATED, GRAY HI6B下壳，电缆对接，彩锌双扣，顶出2PG21，高结构，灰色粉末喷涂	PG21	PG21	TYPE 7
TI750162225-000	HI6B-TBFH-2M25 HI6B HOUSING, CABLE-TO-CABLE, METAL DOUBLE LOCKING, TOP ENTRY 2M25, HIGH CONSTRUCTION, POWDER COATED, GRAY HI6B下壳，电缆对接，彩锌双扣，顶出2M25，高结构，灰色粉末喷涂	M25	M25	
TI750164040-000	HI6B-TBFH-2M40 HI6B HOUSING, CABLE-TO-CABLE, METAL DOUBLE LOCKING, TOP ENTRY M40, SIDE ENTRY M40, HIGH CONSTRUCTION, POWDER COATED, GRAY HI6B下壳，电缆对接，彩锌双扣，顶出M40，侧出M40，高结构，灰色粉末喷涂	M40	M40	TYPE 8
TI770162121-000	HI6B-TBFH-LB-PG21 HI6B HOUSING, CABLE-TO-CABLE, METAL SINGLE LOCKING, TOP ENTRY PG21, HIGH CONSTRUCTION, POWDER COATED, GRAY HI6B下壳，电缆对接，彩锌单扣，顶出PG21，高结构，灰色粉末喷涂	PG21	-	TYPE 9
TI770162129-000	HI6B-TBFH-LB-PG29 HI6B HOUSING, CABLE-TO-CABLE, METAL SINGLE LOCKING, TOP ENTRY PG29, HIGH CONSTRUCTION, POWDER COATED, GRAY HI6B下壳，电缆对接，彩锌单扣，顶出PG29，高结构，灰色粉末喷涂	PG29	-	
TI770162132-000	HI6B-TBFH-LB-M32 HI6B HOUSING, CABLE-TO-CABLE, METAL SINGLE LOCKING, TOP ENTRY M32, HIGH CONSTRUCTION, POWDER COATED, GRAY HI6B下壳，电缆对接，彩锌单扣，顶出M32，高结构，灰色粉末喷涂	M32	-	

THIS DRAWING IS A CONTROLLED DOCUMENT.

DIMENSIONS: mm

TOLERANCES UNLESS OTHERWISE SPECIFIED:
0 PLC ±-
1 PLC ±-
2 PLC ±-
3 PLC ±-
4 PLC ±-
ANGLES ±-

MATERIAL: TBD
FINISH: - -

DWN	DAVID.LI	06JUL2015
CHK	CHRIS.WANG	06JUL2015
APVD	XIANG.XU	06JUL2015
PRODUCT SPEC	108-137013	
APPLICATION SPEC	114-137013	
WEIGHT	-	

TE Connectivity

NAME: HI6B-TBFS/TBF/TBF-LB-PG/M

SIZE	CAGE CODE	DRAWING NO	RESTRICTED TO
A1	-	C-TI7X016XXXX000	

CUSTOMER DRAWING | SCALE 1:1 | SHEET 2 OF 2 | REV B1

printed on 2 Jul 2021 10:21 (China Standard Time) from TE34646