THIS DRAWING IS UNPUBLISHED. RELEASED FOR PUBLICATION 2014
© COPYRIGHT 2013 BY TE CONNECTIVITY ALL RIGHTS RESERVED.

| LOC | DIST |
|---|---|
| | |

REVISIONS

| P | LTR | DESCRIPTION | DATE | DWN | APVD |
|---|---|---|---|---|---|
| | B1 | REVISED PER ECO-16-013285 | 08SEP2016 | DD | DM |
| | B2 | REVISED PER PCN-24-200566 | 19FEB2024 | CO | CB |
| | C | REVISED PER PCN-24-219306 | 29AUG2024 | CO | CB |
| | D | REVISED PER PCN-25-233228 | 18DEC2024 | RK | CB |

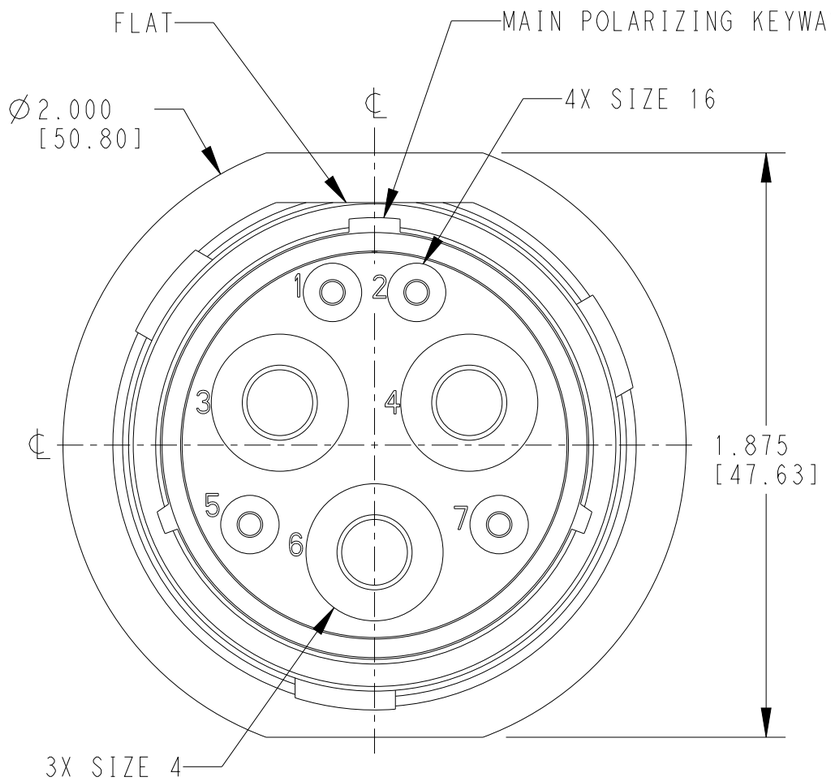


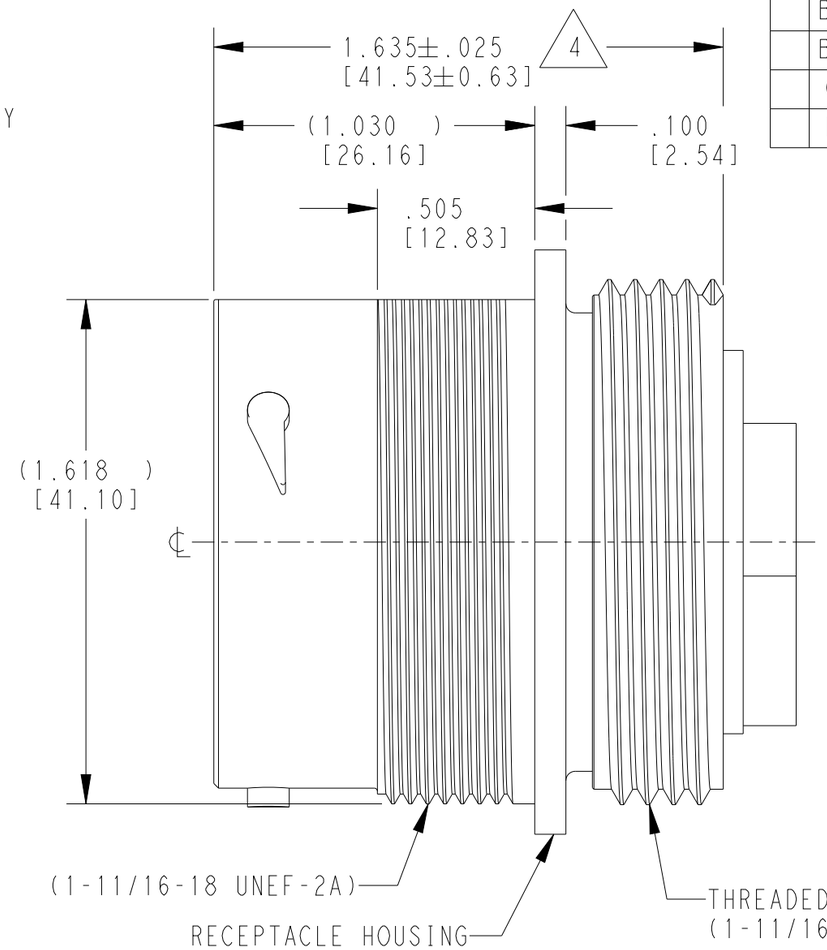


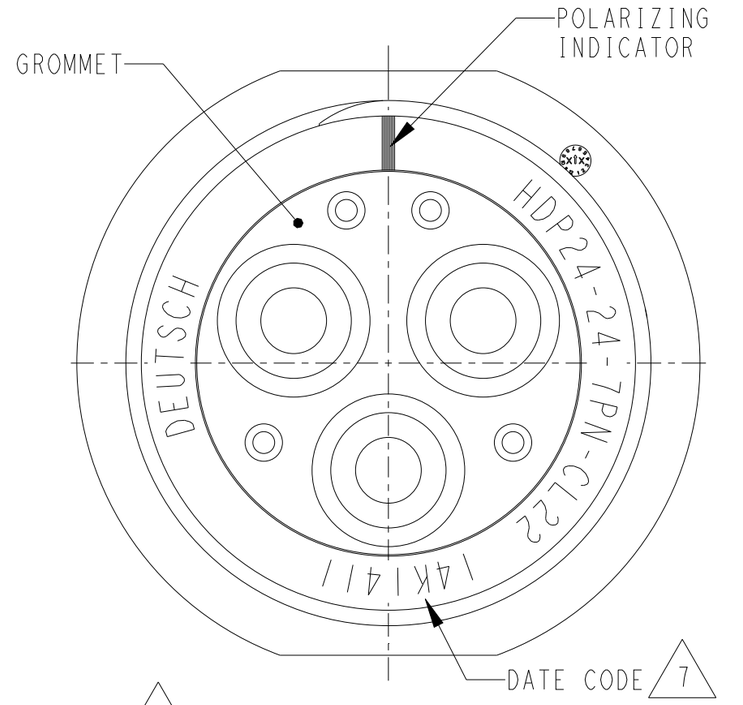


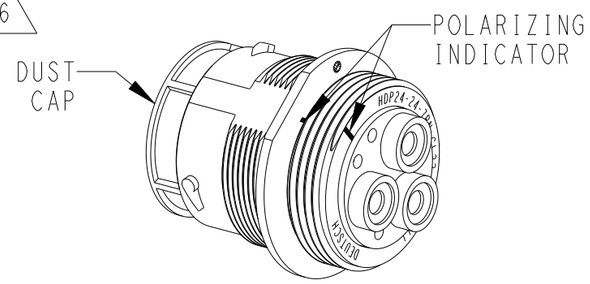


SCALE 3:4

6 PART MODIFICATION: THREADED ADAPTER
3 SIZE 4: 4 AWG [21.0-25.0 mm²] AND 4 SIZE 16
ACCEPT BACKSHELL: 2428-024-2405

5. RECEPTACLE IS SUPPLIED WITH DUST CAP (2415-001-2405)

4 NOTED DIMENSION DOES NOT INCLUDE GROMMET PROTRUSION.

3 MATERIAL: RECEPTACLE HOUSING: PA66 GF10 (BLACK)
THREADED ADAPTER: PA66 GF10 (GREEN, GRAY, BLUE)
GROMMET: SILICONE (ORANGE-RED)

2 SEE 0425-021-0000 APPLICATION SPECIFICATION
A. RECOMMENDED WIRE INSULATION RANGE
B. CONTACT REMOVAL TOOLS
C. RECOMMENDED MOUNTING HOLE & PANEL THICKNESS
D. MOUNTING HARDWARE & MOUNTING TORQUE.

1. THIS RECEPTACLE MATES WITH HDP26-24-7SX-XXXX PLUG
X = SEAL TYPE (N,T,E)
XXXX = MODIFICATION

NOTES:

7 DATE CODE: IDENTIFIES THE YEAR, MONTH, DAY AND HOUR OF ASSEMBLY.
YEAR: FIRST AND SECOND DIGITS. (14 = 2014)
MONTH: THRID DIGIT, EXCLUDING I. A = JAN., B = FEB., C = MARCH.... (K = OCTOBER)
DAY: FOURTH AND FIFTH DIGITS (14 = 14th DAY)
HOUR: SIXTH AND SEVENTH DIGITS (11 = 11AM)

| TE INTERNAL PN | DEUTSCH PN |
|---|---|
| HDP24-24-7PN-CL22 | HDP24-24-7PN-CL22 |

THIS DRAWING IS A CONTROLLED DOCUMENT.

DIMENSIONS: INCHES[mm]

TOLERANCES UNLESS OTHERWISE SPECIFIED:
0 PLC ±
1 PLC ±
2 PLC ±
3 PLC ±.015 [0.38]
4 PLC ±
ANGLES ±0°30'0"

MATERIAL 3

FINISH N/A

DWN 10JUN2014 JAIME C. APOSTOL
CHK 10JUN2014 ILINA GRANTCHAROVA
APVD 10JUN2014 DAVID MEYER
PRODUCT SPEC 0425-021-0000
APPLICATION SPEC 2
WEIGHT 54.78g

TE Connectivity

NAME RECEPTACLE, THREADED
SIZE 24, -CL22
HDP SERIES

| SIZE | CAGE CODE | DRAWING NO | RESTRICTED TO |
|---|---|---|---|
| A3 | 4AFU8 | C-HDP24-24-7PN-CL22 | - |

Customer Drawing | SCALE 2:1 | SHEET 1 OF 1 | REV D

1470-19 (3/11)