© – TE Connectivity. All Rights Reserved.

REVISIONS					
P	LTR	DESCRIPTION	DATE	DWN	APVD
	E3	REVISED PER ECR-25-255998	11SEP2025	SA	DSC

1 FOR .080–.125 WIRE INSULATION DIA

2 TONGUE MATERIAL THK = .031±.002

3 APPLIES FROM THE METAL EDGE OF THE BARREL TO THE CENTER OF THE STUD

4 MARKING 22–18 FOR MILITARY, COMMERCIAL RANGE 22–16

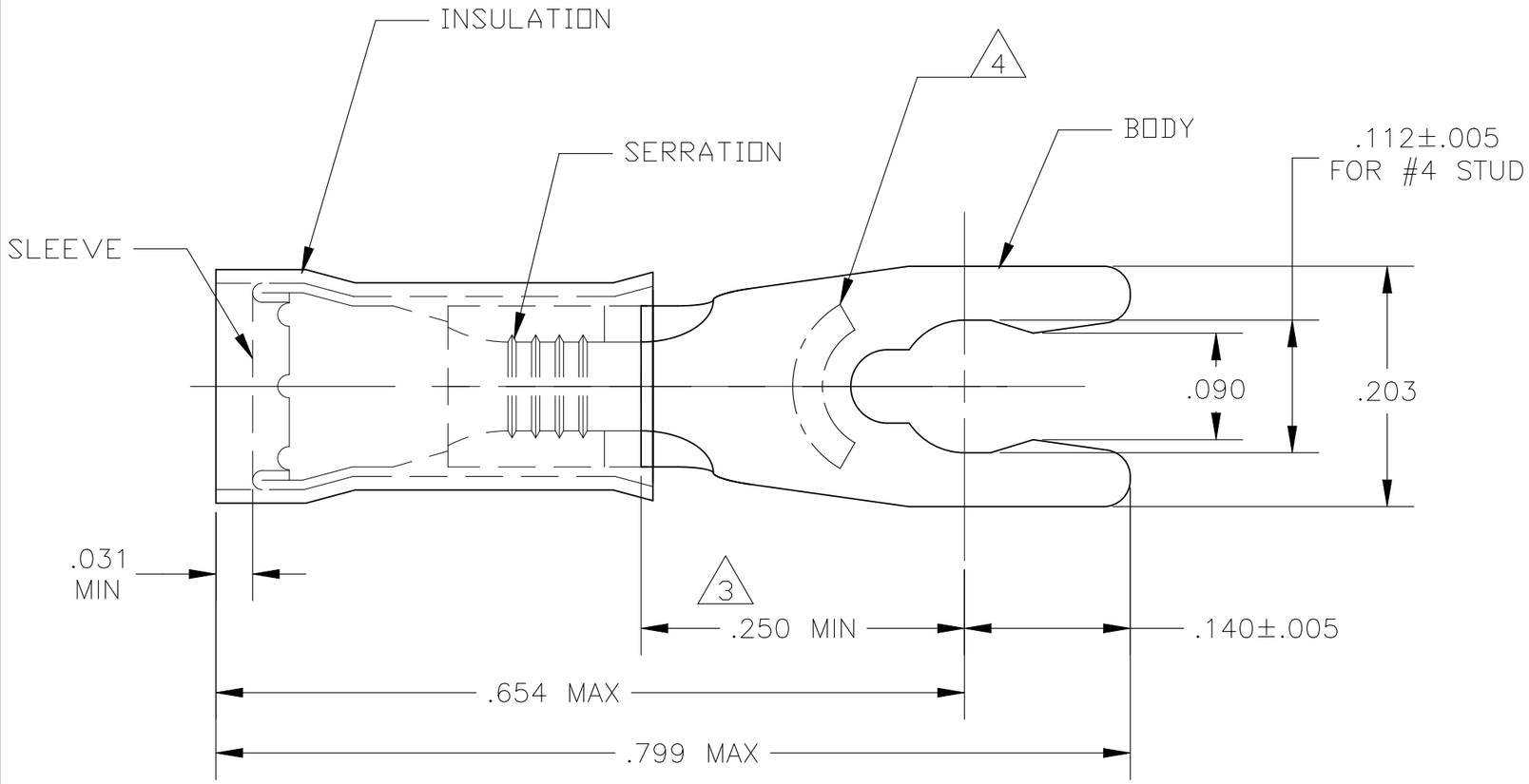

QTY	DESCRIPTION	MATERIAL & FINISH	PART NO
100	LOOSE PIECE, BOX	BODY: PHOS BRONZE PER ASTM-B103 TIN PLATE PER ASTM-B545 SLEEVE: COPPER PER ASTM-B152 INSULATION: NYLON PER ASTM-D4066 TYPE 1, COLOR: RED	8-52927-1
1 KIT = 250 PIECES	WIRE TERMINAL		6-52927-0
5,000	52927 ON TAPE		52927-1
1	WIRE TERMINAL		52927

THIS DRAWING IS A CONTROLLED DOCUMENT.

DIMENSIONS: INCHES

TOLERANCES UNLESS OTHERWISE SPECIFIED:

0 PLC	± –
1 PLC	± –
2 PLC	± .008
3 PLC	± –
4 PLC	± –
ANGLES	± 5°

MATERIAL: SEE TABLE

FINISH: SEE TABLE

DWN jr ruth 09MAR10
CHK TOM MICHIELUTTI 09MAR10
APVD TOM MICHIELUTTI 09MAR10
PRODUCT SPEC —
APPLICATION SPEC —
WEIGHT —

TE Connectivity

NAME: WIRE TERMINAL, PIDG, SPRING SPADE, WIRE SIZE: 22–16 AWG

SIZE	CAGE CODE	DRAWING NO	RESTRICTED TO
A3	00779	C-52927	—

CUSTOMER DRAWING

SCALE 8:1 SHEET 1 OF 1 REV E3