THIS DRAWING IS UNPUBLISHED. RELEASED FOR PUBLICATION -,- .
© COPYRIGHT - BY TYCO ELECTRONICS CORPORATION. ALL INTERNATIONAL RIGHTS RESERVED.

LOC	DIST
AF	50

REVISIONS

P	LTR	DESCRIPTION	DATE	DWN	APVD
	L1	REVISED PER ECR-09-022790	20OCT09	HMR	DD

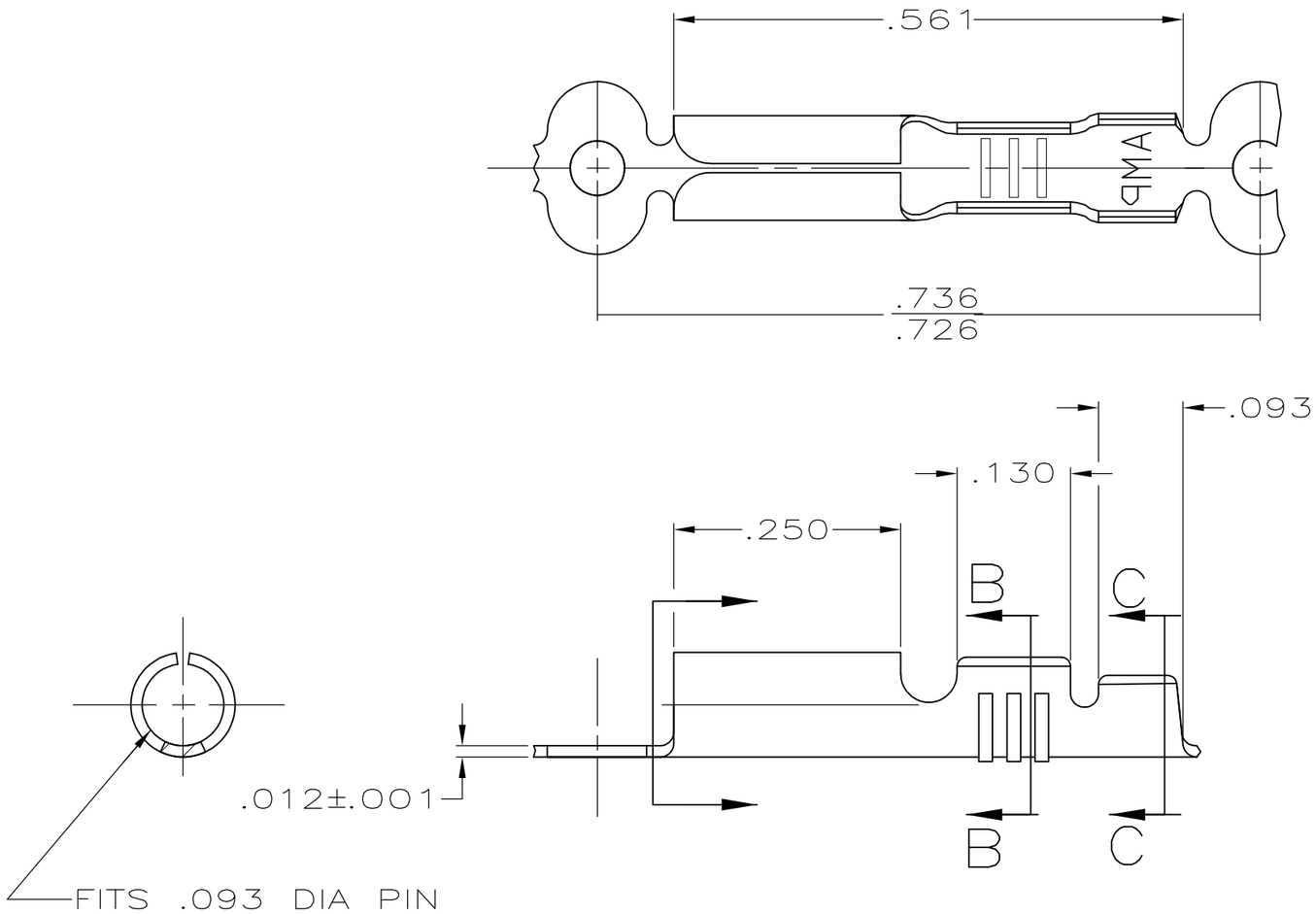

1 CONTINUOUS STRIP ON REELS.

2 WIRE SIZE IS #24-18 AWG

3 INSULATION RANGE IS .045-.085 DIA.

5 WITH INTERLEAVING PAPER

FINISH	MATERIAL	PART NO
.000080 MIN TIN PLATE	H04 BRASS	5 42827-5
-	1/4 HD SST	42827-4
.000080 MIN TIN PLATE	H04 BRASS	42827-2

THIS DRAWING IS A CONTROLLED DOCUMENT.

DIMENSIONS: INCHES

TOLERANCES UNLESS OTHERWISE SPECIFIED:

0 PLC	± -
1 PLC	± -
2 PLC	± -
3 PLC	± .015
4 PLC	± -
ANGLES	± -

MATERIAL: SEE TABLE

FINISH: SEE TABLE

DWN	P FORTNEY	4/18/91
CHK	JR RUTH	4/18/91
APVD	G YETTER	4/29/91
PRODUCT SPEC	-	
APPLICATION SPEC	-	
WEIGHT	-	

CUSTOMER DRAWING

Tyco Electronics

Tyco Electronics Corporation
Harrisburg, PA 17105-3608

NAME: RECEPTACLE, PIN, .093 DIA

SIZE	CAGE CODE	DRAWING NO	RESTRICTED TO
A3	00779	C-42827	-

SCALE	SHEET	REV
6:1	1 OF 1	L1