© – TE Connectivity. All Rights Reserved.

REVISIONS					
P	LTR	DESCRIPTION	DATE	DWN	APVD
	M5	REVISED PER ECR-25-255998	16SEP2025	SA	DSC

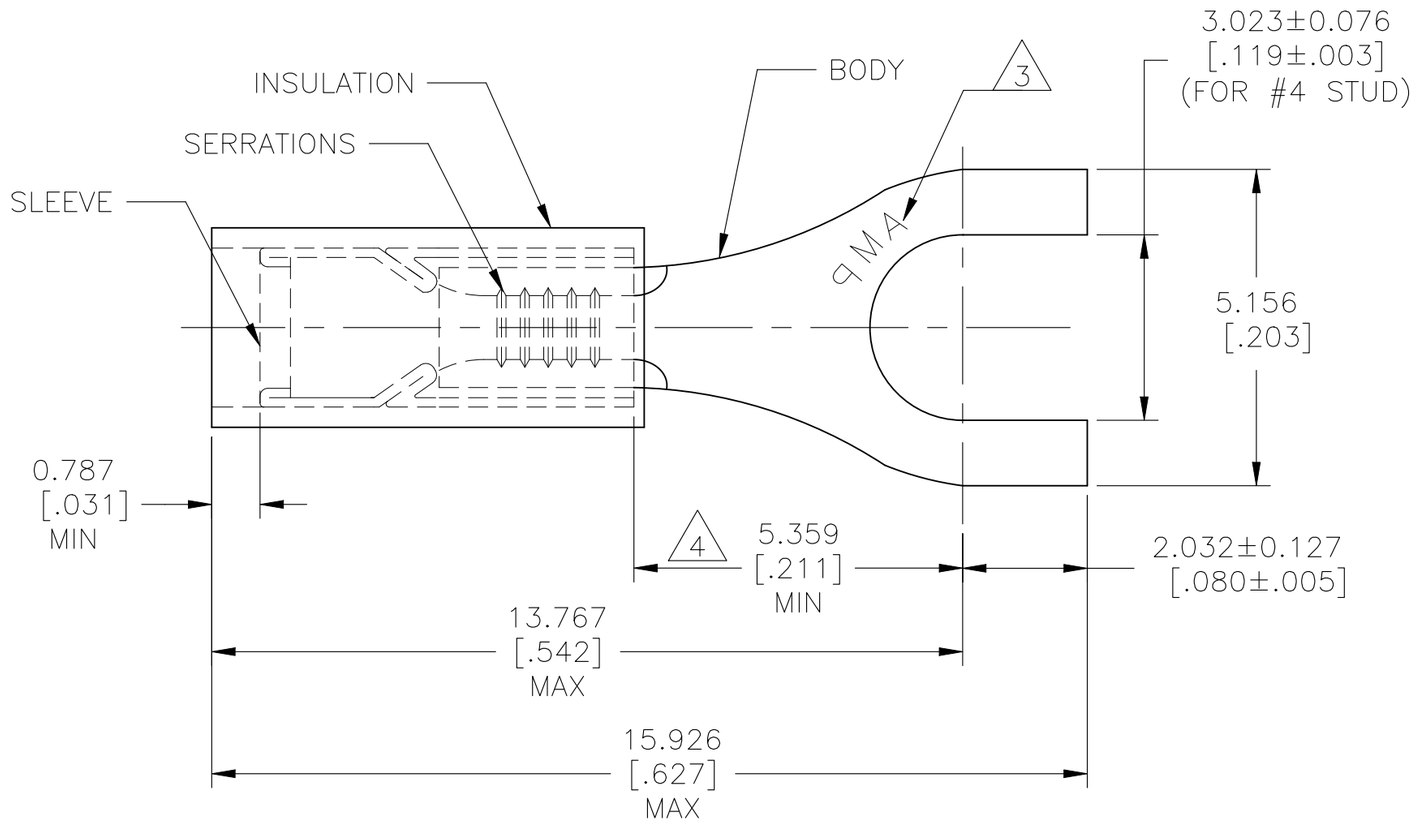

AMP
WIRE RANGE

26–22 AWG
STRANDED

1 TONGUE MATERIAL THK: 0.457±0.051[.018±.002]

2 FOR WIRE INSULATION DIA:1.270[.050] TO 2.083[.082]

3 STAMP AMP APPROX AS SHOWN

4 DIMENSION APPLIES FROM EDGE OF METAL WIRE BARREL TO CENTER OF STUD

5 MATERIAL: BODY & SLEEVE: COPPER PER ASTM B152
INSULATION : NYLON

6 FINISH: BODY & SLEEVE: TIN PLATE PER ASTM B545
INSULATION: COLOR–YELLOW

QTY	PACKAGE TYPE	PART NO
1 KIT = 50 PIECES	LOOSE PC	6–321035–0
1000	LOOSE PC	321035

AMP INCORPORATED
CUSTOMER SERVICE SYSTEMS

FOR ADDITIONAL PRODUCT INFORMATION OR COPIES OF DRAWINGS AND TECHNICAL DOCUMENTS	PRODUCT INFORMATION CENTER 1–800–522–6752	RECOMMENDED OPERATING TEMPERATURE: 105°C[221°F]
FOR APPLICATION TOOLING INFORMATION	TOOLING ASSISTANCE CENTER 1–800–722–1111	VOLTAGE RATING: 300 V MAX
FOR ORDER ENTRY	1–800–526–5142	WIRE CROSS SECTIONAL AREA RANGE: 0.10–0.41mm² [202–810] CIR.MIL STRANDED

THIS DRAWING IS A CONTROLLED DOCUMENT.

DIMENSIONS: mm [INCHES]

TOLERANCES UNLESS OTHERWISE SPECIFIED:
0 PLC ± –
1 PLC ± –
2 PLC ± –
3 PLC ± 0.127[.005]
4 PLC ± –
ANGLES ± 5°

MATERIAL 5

FINISH 6

DWN	KIRAN HOLAL	03APR12
CHK	ROHDE DANIEL	03APR12
APVD	ROHDE DANIEL	03APR12
PRODUCT SPEC	—	
APPLICATION SPEC	114–2157	
WEIGHT		

TE Connectivity

NAME: WIRE TERMINAL, P.I.D.G.™ 26–22 AWG SPADE #4 STUD
—

SIZE	CAGE CODE	DRAWING NO	RESTRICTED TO
A3	00779	C–321035	—

CUSTOMER DRAWING | SCALE 10:1 | SHEET 1 OF 1 | REV M5

1470–19 (1/15)