THIS DRAWING IS UNPUBLISHED. RELEASED FOR PUBLICATION 20
© COPYRIGHT - BY - ALL RIGHTS RESERVED.

REVISIONS					
P	LTR	DESCRIPTION	DATE	DWN	APVD
	A	RELEASED PER ECO 17-011864	8-15-17	CT	DHW
	B	RELEASED PER ECN-24-265555	13MAY2024	RTF	J.G.

WARNING - THIS DOCUMENT CONTAINS TECHNOLOGY WHOSE EXPORT IS RESTRICTED BY THE EXPORT ADMINISTRATION REGULATIONS ("EAR") PURSUANT TO 15 C.F.R. PARTS 730-774. VIOLATIONS OF THE EAR ARE SUBJECT TO SEVERE CRIMINAL PENALTIES UNDER THE EXPORT CONTROL REFORM ACT, AS AMENDED (TITLE 50, U.S.C., SEC. 4801, ET SEQ.).

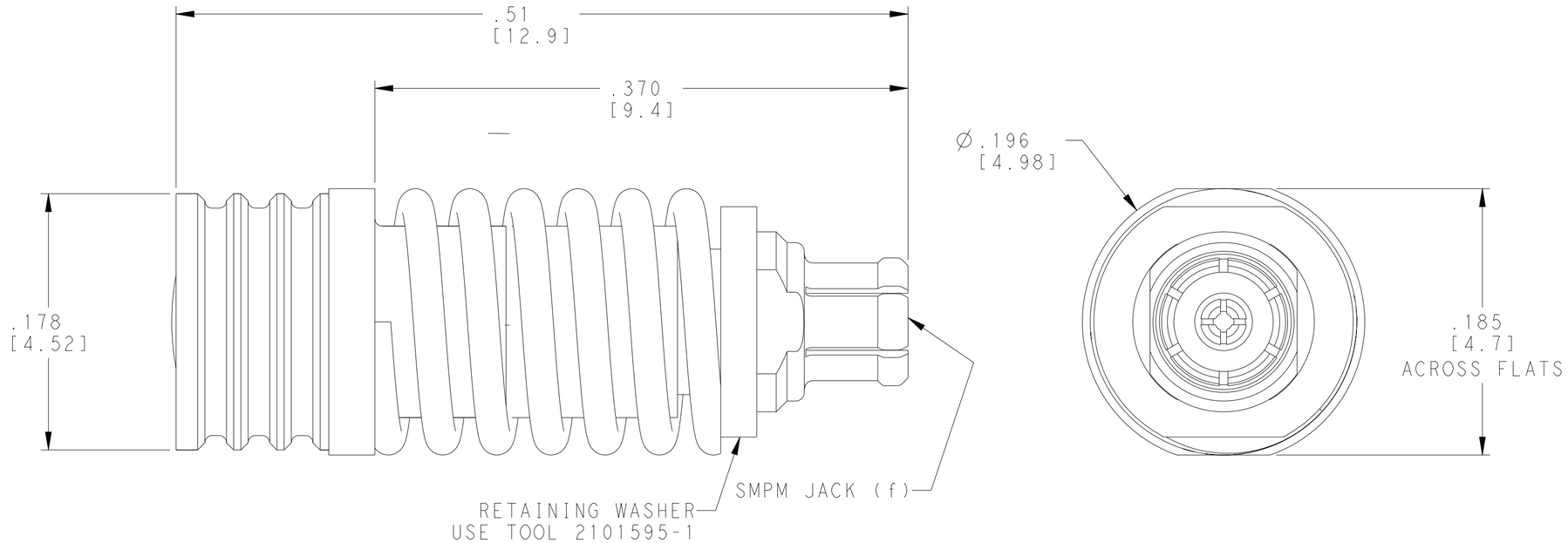

PERFORMANCE:
- IMPEDANCE: 50 OHMS
- VSWR: 1.15+.01Xf(GHz), DC-40 GHz
- POWER: 1/2 WATT AT 70°C
- OPERATING TEMPERATURE RANGE: -55°C TO 105°C
- SPRING:
  - PRELOAD: 2.35±.25 LBF
  - FORCE AT .052 DEFLECTION: 3.60±.30 LBF
  - FULL DEFLECTION: .078 [2.0] MIN

RESISTIVE ELEMENT	NICHROME THIN FILM OVER ALUMINA SUBSTRATE WITH POLYMER PROTECTIVE COATING	TERMINALS: GOLD PLATE PER ASTM B488 OVER NICKEL PLATE PER QQ-N-290
HOUSING CENTER CONTACT	BERYLLIUM COPPER PER ASTM B194, ALLOY C17200, CONDITION H	GOLD PLATE PER ASTM B488 OVER NICKEL PLATE PER QQ-N-290
END CAP	STAINLESS STEEL PER ASTM A484 AND ASTM A582, TYPE 303	GOLD PLATE PER ASTM B488 OVER NICKEL PLATE PER QQ-N-290
DIELECTRIC	PTFE PER ASTM D1457	N/A
BUSHING	BRASS PER ASTM B16 HALF HARD	GOLD PLATE PER ASTM B488 OVER NICKEL PLATE PER QQ-N-290
SOLDER	SN63 OR SN60	N/A
COMPONENT	MATERIAL	FINISH

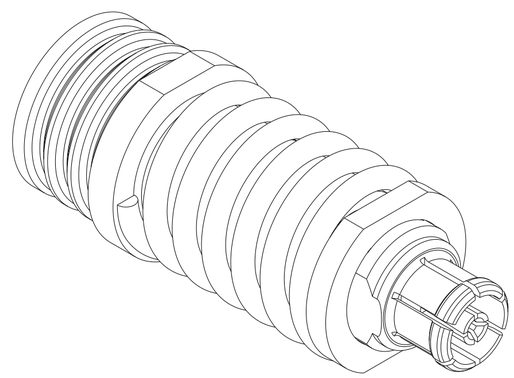

SCALE 10:1

2321032-1
PART NUMBER

THIS DRAWING IS A CONTROLLED DOCUMENT.

DIMENSIONS: in [mm]

TOLERANCES UNLESS OTHERWISE SPECIFIED:
0 PLC ±-
1 PLC ±-
2 PLC ±.01 [0.25]
3 PLC ±.005 [0.13]
4 PLC ±-
ANGLES ±5

MATERIAL - -
FINISH - -

DWN D.WILSON 13JUN2017
CHK D.WILSON 15JUN2017
APVD D.WILSON 15JUN2017
PRODUCT SPEC -
APPLICATION SPEC -
WEIGHT -

TE Connectivity

NAME TERMINATOR, 50 OHM, SMPM JACK VITA 67, FLOAT MOUNT
-

SIZE	CAGE CODE	DRAWING NO	RESTRICTED TO
A2	00779	C-2321032	-

CUSTOMER DRAWING SCALE 15:1 SHEET 1 OF 1 REV B

1471-9 (3/13)