© 2020 TE Connectivity. All Rights Reserved.

REVISIONS					
P	LTR	DESCRIPTION	DATE	DWN	APVD
	F	REVISED PER ECR-20-008263	10JUN2020	M.J	E.I

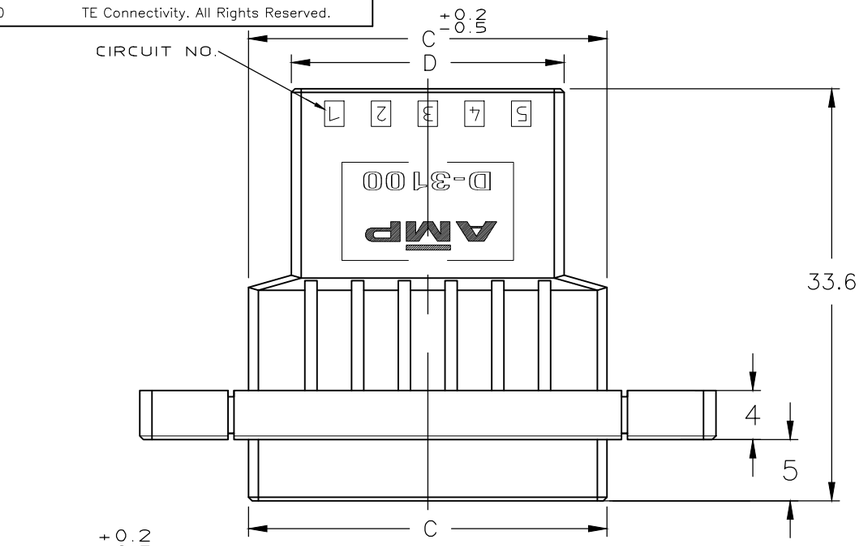

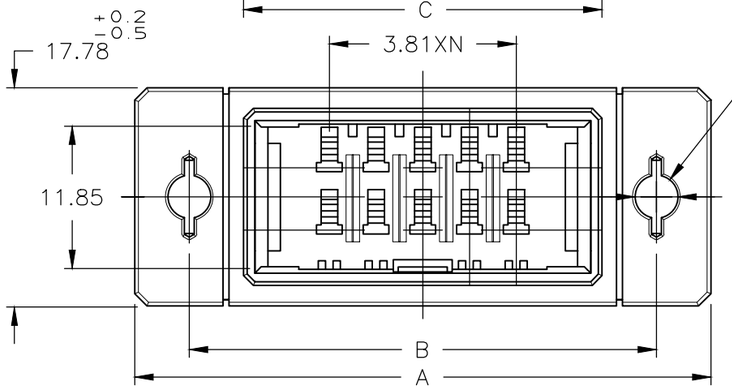

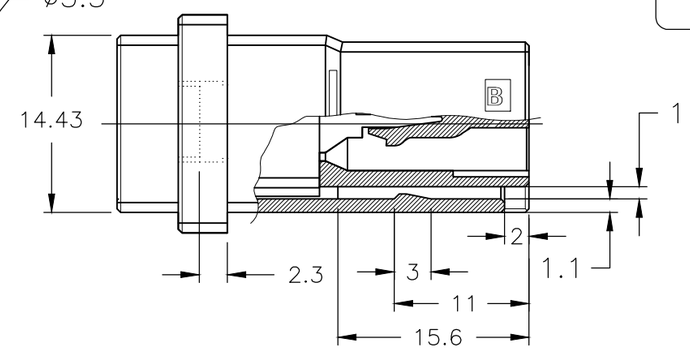

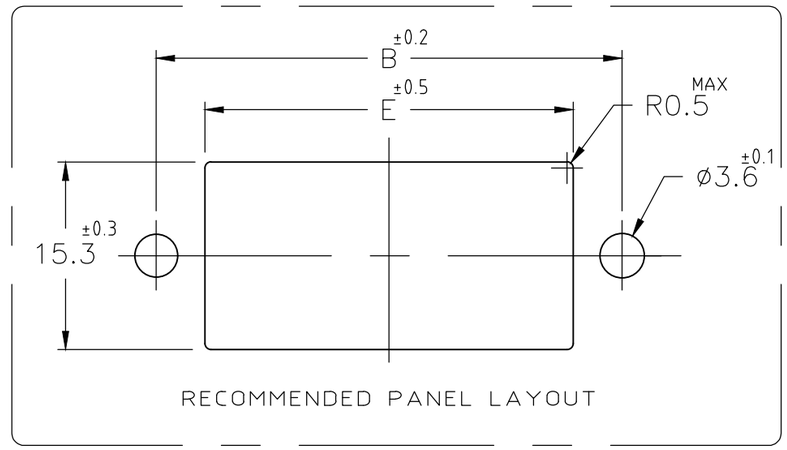

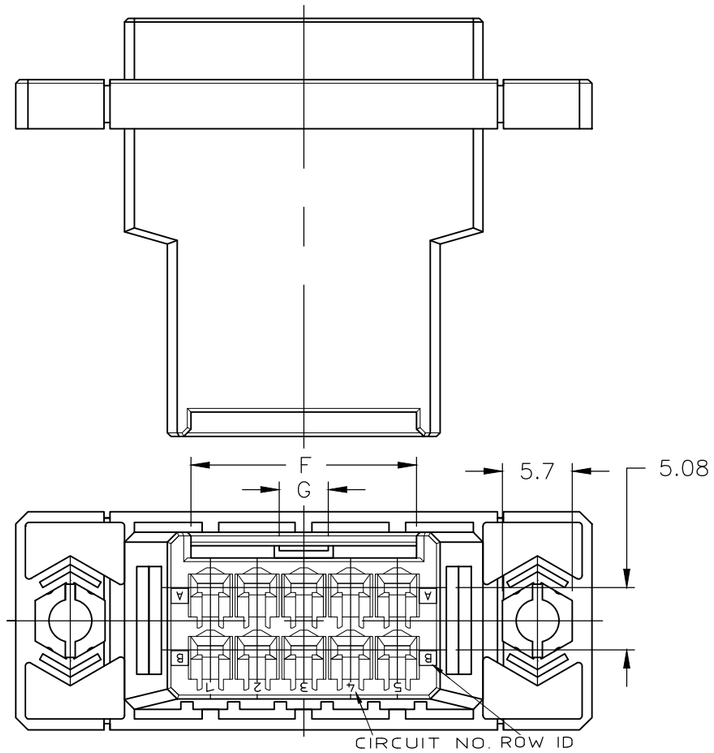

1 MATERIAL:GLASS FIELD THERMO PLASTIC,POLYESTER
COLOR;BLACK

~~2 TO COAT ALL SURFACE OF HOUSING WITH TEFLON~~

3 PANEL ATTACHMENT RECOMMENDATION M3 SCREW

		20	67	58	48.29	41.29	49.2	18.4	4	9	178803-8
OBSOLETE	~~2~~	↑	↑	↑	↑	↑	↑	↑	↑	↑	~~5-178803-7~~
		16	59	50	40.67	33.67	41.6	18.4	4	7	178803-7
		12	51	42	33.05	26.05	34	18.4	4	5	178803-6
		10	47	38	29.24	22.24	30.2	18.4	4	4	178803-5
		6	40	31	21.62	14.62	22.6	8.4	2	2	178803-3
	FINISH	POS. / DIMENSION	A	B	C	D	E	F	G	N	PART NUMBER

THIS DRAWING IS A CONTROLLED DOCUMENT.

DIMENSIONS: mm

TOLERANCES UNLESS OTHERWISE SPECIFIED:
~~0 PLC~~ ~10:± 0.2
~~1 PLC~~ 10~30:± 0.25
~~2 PLC~~ 30~:± 0.3
~~3 PLC~~ ± –
~~4 PLC~~ ± –
ANGLES ±3

MATERIAL 1

FINISH –

DWN N.MATSUBARA 04MAR1992
CHK H.OBATA 05MAR1992
APVD S.MANABE 05MAR1992
PRODUCT SPEC —
APPLICATION SPEC —
WEIGHT —

TE Connectivity

NAME
WIRE TO WIRE PANEL MOUNT TYPE
TAB HSG FOR DYNAMIC 3100 (DOUBLE ROW)

SIZE	CAGE CODE	DRAWING NO	RESTRICTED TO
A3	00779	C-178803	—

CUSTOMER DRAWING

SCALE	SHEET	REV
2:1	1 OF 1	F