© – TE Connectivity. All Rights Reserved.

REVISIONS					
P	LTR	DESCRIPTION	DATE	DWN	APVD
	J2	ECR-25-239014	15APR2025	ABS	PS

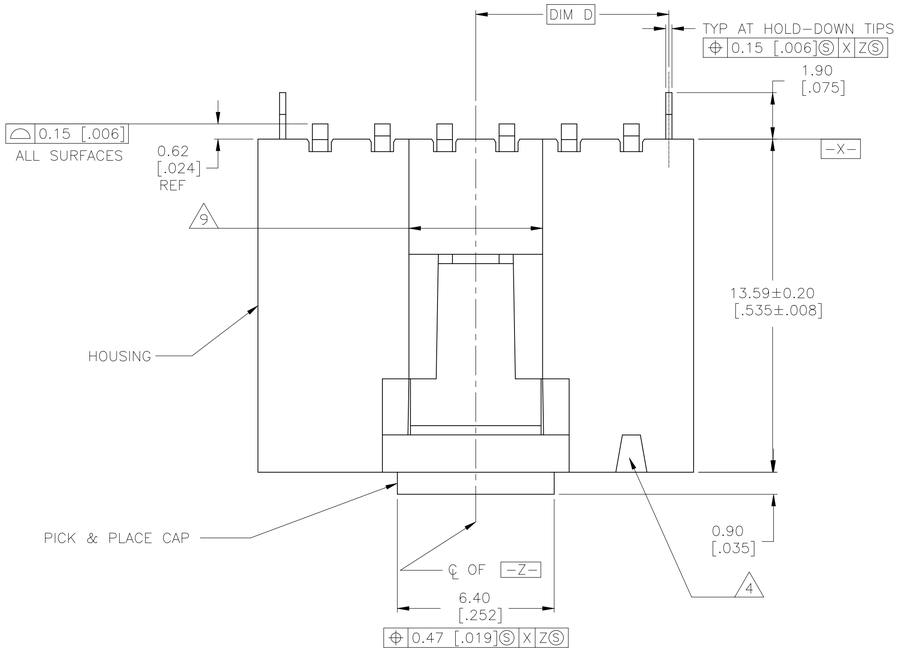

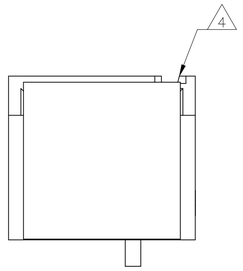

CIRCUIT IDENTIFICATION DETAIL
FOR 2 POSITION HOUSING ONLY

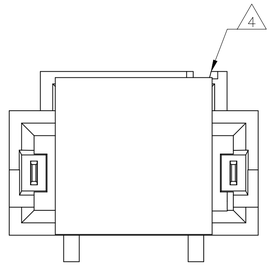

CIRCUIT IDENTIFICATION DETAIL
FOR 3 AND 4 POSITION HOUSING ONLY

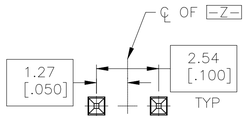

BASIC DIMENSIONS FOR
EVEN NUMBER OF POSITIONS
(SEE TABLE)

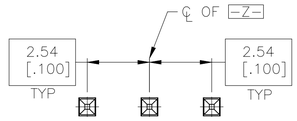

BASIC DIMENSIONS FOR
ODD NUMBER OF POSITIONS
(SEE TABLE)

DETAIL L
SHOWN WITH CAP
REMOVED FOR CLARITY

1. PACKAGE: TAPE AND REEL PER EIA-481 SPECIFICATIONS.
SEE TABLE FOR TAPE WIDTHS

2. MATERIAL: HOUSING AND PICK & PLACE CAP: HIGH TEMPERATURE LCP, COLOR – BLACK, CONTACTS: BRASS,
HOLD-DOWNS: BERYLLIUM COPPER

3. FINISH: CONTACTS: 0.000381 [.000015] GOLD IN CONTACT AREA,
0.00254[.0001] MATTE TIN-LEAD ON SOLDER TAIL
ALL OVER 0.00127[.00005] NICKEL
HOLD-DOWNS: 0.00381[.00015] MATTE TIN-LEAD
OVER 0.00127[.00005] NICKEL

4. CIRCUIT POSITION #1 IDENTIFICATION MARK

5. DATUMS AND BASIC DIMENSIONS ARE ESTABLISHED BY CUSTOMER

6. RECOMMENDED PC BOARD THICKNESS OF 1.57[.062]

7. USE 1.510 ±0.025[.0595±.0010] DRILLED HOLE (#53 DRILL),
FINISH TO BE TIN-LEAD OVER 0.02[.0008] MIN COPPER

8. FINISH: CONTACTS: 0.000381 [.000015] GOLD IN CONTACT AREA,
0.00254[.0001] MATTE TIN ON SOLDER TAIL
ALL OVER 0.00127[.00005] NICKEL
HOLD-DOWNS: 0.00381[.00015] MATTE TIN
OVER 0.00127[.00005] NICKEL

9. 0.25 [.010] RECESS PERMISSIBLE IN THIS AREA FOR MOLD SHUT OFF

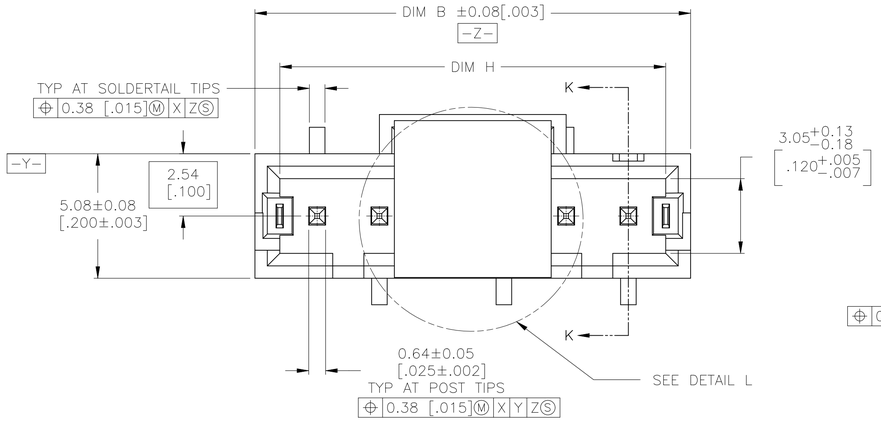

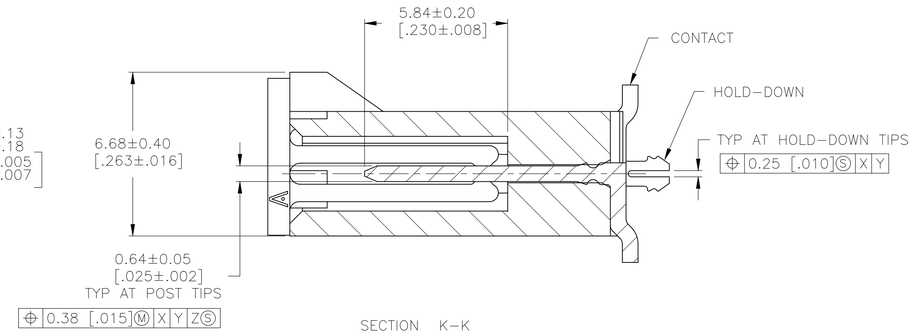

SECTION K–K

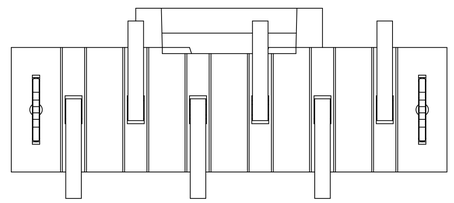

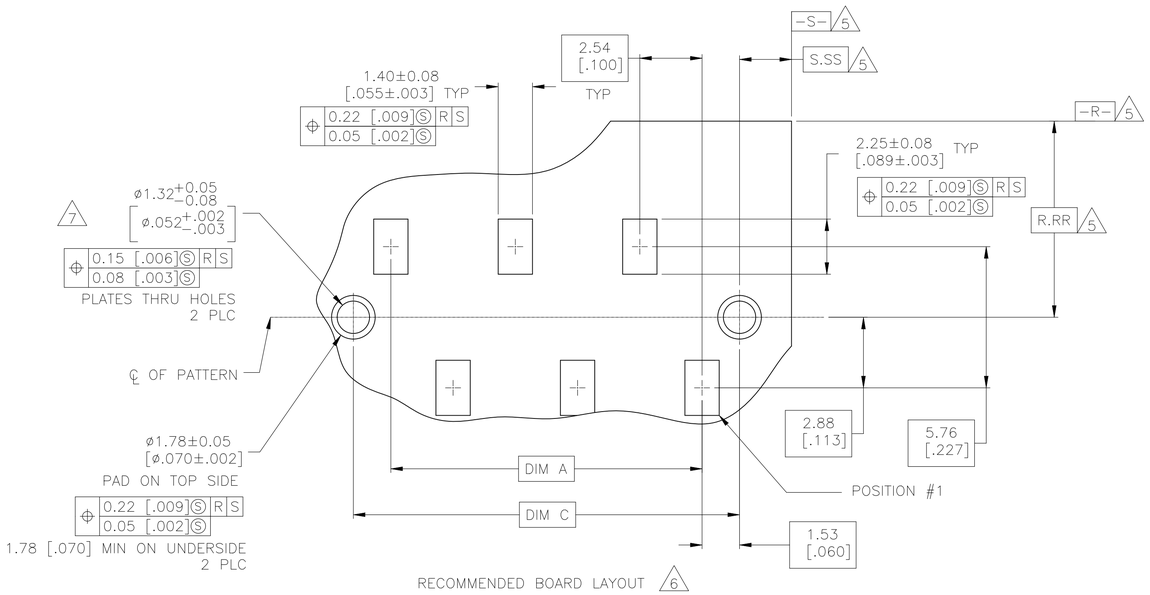

RECOMMENDED BOARD LAYOUT 6

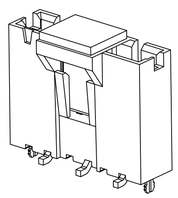

SCALE 5:1

THIS DRAWING IS A CONTROLLED DOCUMENT.	DWN J. MOSER 26OCT99	TE Connectivity Ltd.	
DIMENSIONS: mm [INCHES]	CHK L. BRESKOSKY 26OCT99		
TOLERANCES UNLESS OTHERWISE SPECIFIED: 0 PLC ± – 1 PLC ± – 2 PLC ± 0.13 [.005] 3 PLC ± – 4 PLC ± – ANGLES ± –	APVD K. WRIGHT 27JUN00	NAME AMPMODU MTE SURFACE MOUNT. VERTICAL HEADER ASSEMBLY –	
	PRODUCT SPEC 108-25034-2		
	APPLICATION SPEC 114-25026	SIZE A1 / CAGE CODE 00779 / DRAWING NO C-1375582	RESTRICTED TO –
MATERIAL 2 / FINISH SEE TABLE	WEIGHT –		
	CUSTOMER DRAWING	SCALE 8:1 / SHEET 1 OF 2	REV J2

© – TE Connectivity. All Rights Reserved.

REVISIONS					
P	LTR	DESCRIPTION	DATE	DWN	APVD
	–	SEE SHEET 1	–	–	–

	PLATING	TAPE WIDTH	H	D	C	B	A	NO OF POSN	PART NUMBER
OBSOLETE	8	88[3.465]	64.01[2.530]	32.01[1.260]	64.02[2.520]	65.91[2.595]	60.96[2.400]	25	7–1375582–4
	8	88[3.465]	61.47[2.420]	30.74[1.210]	61.48[2.420]	63.37[2.495]	58.42[2.300]	24	7–1375582–3
OBSOLETE	8	88[3.465]	58.93[2.320]	29.47[1.160]	58.94[2.320]	60.83[2.395]	55.88[2.200]	23	7–1375582–2
	8	88[3.465]	56.39[2.220]	28.20[1.110]	56.40[2.220]	58.29[2.295]	53.34[2.100]	22	7–1375582–1
	8	88[3.465]	53.85[2.120]	26.93[1.060]	53.86[2.120]	55.75[2.195]	50.80[2.000]	21	7–1375582–0
	8	72[2.835]	51.31[2.020]	25.66[1.010]	51.32[2.020]	53.21[2.095]	48.26[1.900]	20	6–1375582–9
	8	72[2.835]	48.77[1.920]	24.39[.960]	48.78[1.920]	50.67[1.995]	45.72[1.800]	19	6–1375582–8
	8	72[2.835]	46.23[1.820]	23.12[.910]	46.24[1.820]	48.13[1.895]	43.18[1.700]	18	6–1375582–7
	8	72[2.835]	43.69[1.720]	21.85[.860]	43.70[1.720]	45.59[1.795]	40.64[1.600]	17	6–1375582–6
	8	72[2.835]	41.15[1.620]	20.58[.810]	41.16[1.620]	43.05[1.695]	38.10[1.500]	16	6–1375582–5
	8	56[2.205]	38.61[1.520]	19.31[.760]	38.62[1.520]	40.51[1.595]	35.56[1.400]	15	6–1375582–4
	8	56[2.205]	36.07[1.420]	18.04[.710]	36.08[1.420]	37.97[1.495]	33.02[1.300]	14	6–1375582–3
	8	56[2.205]	33.53[1.320]	16.77[.660]	33.54[1.320]	35.43[1.395]	30.48[1.200]	13	6–1375582–2
	8	56[2.205]	30.99[1.220]	15.50[.610]	31.00[1.220]	32.89[1.295]	27.94[1.100]	12	6–1375582–1
	8	56[2.205]	28.45[1.120]	14.23[.560]	28.46[1.120]	30.35[1.195]	25.40[1.000]	11	6–1375582–0
	8	56[2.205]	25.91[1.020]	12.96[.510]	25.92[1.020]	27.81[1.095]	22.86[.900]	10	5–1375582–9
OBSOLETE	8	44[1.732]	23.37[.920]	11.69[.460]	23.38[.920]	25.27[.995]	20.32[.800]	9	5–1375582–8
	8	44[1.732]	20.83[.820]	10.42[.410]	20.84[.820]	22.73[.895]	17.78[.700]	8	5–1375582–7
	8	44[1.732]	18.29[.720]	9.15[.360]	18.30[.720]	20.19[.795]	15.24[.600]	7	5–1375582–6
	8	32[1.260]	15.75[.620]	7.88[.310]	15.76[.620]	17.65[.695]	12.70[.500]	6	5–1375582–5
	8	32[1.260]	13.21[.520]	6.61[.260]	13.22[.520]	15.11[.595]	10.16[.400]	5	5–1375582–4
	8	32[1.260]	10.67[.420]	5.34[.210]	10.68[.420]	12.57[.495]	7.62[.300]	4	5–1375582–3
	8	32[1.260]	8.13[.320]	4.07[.160]	8.14[.320]	10.03[.395]	5.08[.200]	3	5–1375582–2
	8	24[.945]	5.59[.220]	2.80[.110]	5.60[.220]	7.49[.295]	2.54[.100]	2	5–1375582–1
OBSOLETE	3	88[3.465]	64.01[2.530]	32.01[1.260]	64.02[2.520]	65.91[2.595]	60.96[2.400]	25	2–1375582–4
	3	88[3.465]	61.47[2.420]	30.74[1.210]	61.48[2.420]	63.37[2.495]	58.42[2.300]	24	2–1375582–3
	3	88[3.465]	58.93[2.320]	29.47[1.160]	58.94[2.320]	60.83[2.395]	55.88[2.200]	23	2–1375582–2
	3	88[3.465]	56.39[2.220]	28.20[1.110]	56.40[2.220]	58.29[2.295]	53.34[2.100]	22	2–1375582–1
	3	88[3.465]	53.85[2.120]	26.93[1.060]	53.86[2.120]	55.75[2.195]	50.80[2.000]	21	2–1375582–0
	3	72[2.835]	51.31[2.020]	25.66[1.010]	51.32[2.020]	53.21[2.095]	48.26[1.900]	20	1–1375582–9
	3	72[2.835]	48.77[1.920]	24.39[.960]	48.78[1.920]	50.67[1.995]	45.72[1.800]	19	1–1375582–8
	3	72[2.835]	46.23[1.820]	23.12[.910]	46.24[1.820]	48.13[1.895]	43.18[1.700]	18	1–1375582–7
	3	72[2.835]	43.69[1.720]	21.85[.860]	43.70[1.720]	45.59[1.795]	40.64[1.600]	17	1–1375582–6
	3	72[2.835]	41.15[1.620]	20.58[.810]	41.16[1.620]	43.05[1.695]	38.10[1.500]	16	1–1375582–5
	3	56[2.205]	38.61[1.520]	19.31[.760]	38.62[1.520]	40.51[1.595]	35.56[1.400]	15	1–1375582–4
	3	56[2.205]	36.07[1.420]	18.04[.710]	36.08[1.420]	37.97[1.495]	33.02[1.300]	14	1–1375582–3
	3	56[2.205]	33.53[1.320]	16.77[.660]	33.54[1.320]	35.43[1.395]	30.48[1.200]	13	1–1375582–2
	3	56[2.205]	30.99[1.220]	15.50[.610]	31.00[1.220]	32.89[1.295]	27.94[1.100]	12	1–1375582–1
	3	56[2.205]	28.45[1.120]	14.23[.560]	28.46[1.120]	30.35[1.195]	25.40[1.000]	11	1–1375582–0
SUPERSEDED BY 5–1375582–9	3	56[2.205]	25.91[1.020]	12.96[.510]	25.92[1.020]	27.81[1.095]	22.86[.900]	10	1375582–9
OBSOLETE	3	44[1.732]	23.37[.920]	11.69[.460]	23.38[.920]	25.27[.995]	20.32[.800]	9	1375582–8
SUPERSEDED BY 5–1375582–7	3	44[1.732]	20.83[.820]	10.42[.410]	20.84[.820]	22.73[.895]	17.78[.700]	8	1375582–7
SUPERSEDED BY 5–1375582–6	3	44[1.732]	18.29[.720]	9.15[.360]	18.30[.720]	20.19[.795]	15.24[.600]	7	1375582–6
SUPERSEDED BY 5–1375582–5	3	32[1.260]	15.75[.620]	7.88[.310]	15.76[.620]	17.65[.695]	12.70[.500]	6	1375582–5
SUPERSEDED BY 5–1375582–4	3	32[1.260]	13.21[.520]	6.61[.260]	13.22[.520]	[.595]	10.16[.400]	5	1375582–4
SUPERSEDED BY 5–1375582–3	3	32[1.260]	10.67[.420]	5.34[.210]	10.68[.420]	12.57[.495]	7.62[.300]	4	1375582–3
SUPERSEDED BY 5–1375582–2	3	32[1.260]	8.13[.320]	4.07[.160]	8.14[.320]	10.03[.395]	5.08[.200]	3	1375582–2
SUPERSEDED BY 5–1375582–1	3	24[.945]	5.59[.220]	2.80[.110]	5.60[.220]	7.49[.295]	2.54[.100]	2	1375582–1

THIS DRAWING IS A CONTROLLED DOCUMENT.

DIMENSIONS: mm [INCHES]

TOLERANCES UNLESS OTHERWISE SPECIFIED:
0 PLC ± –
1 PLC ± –
2 PLC ± 0.13 [.005]
3 PLC ± –
4 PLC ± –
ANGLES ± –

MATERIAL 2

FINISH SEE TABLE

DWN J. MOSER 26OCT99
CHK L. BRESKOSKY 26OCT99
APVD K. WRIGHT 27JUN00
PRODUCT SPEC 108–25034–2
APPLICATION SPEC 114–25026
WEIGHT –

TE Connectivity Ltd.

NAME AMPMODU MTE SURFACE MOUNT. VERTICAL HEADER ASSEMBLY

SIZE	CAGE CODE	DRAWING NO	RESTRICTED TO
A1	00779	C–1375582	–

CUSTOMER DRAWING | SCALE 8:1 | SHEET 2 OF 2 | REV J2

4805 (1/15)