© – TE Connectivity. All Rights Reserved.

REVISIONS					
P	LTR	DESCRIPTION	DATE	DWN	APVD
	L4	PART OBSOLESCENCE	28APR2026	LS	SRK

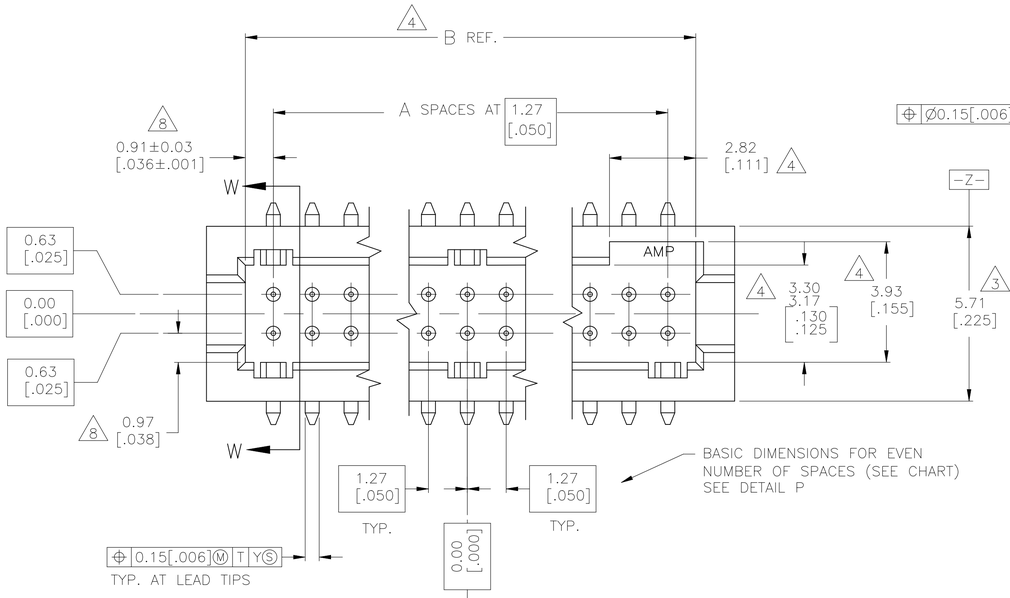

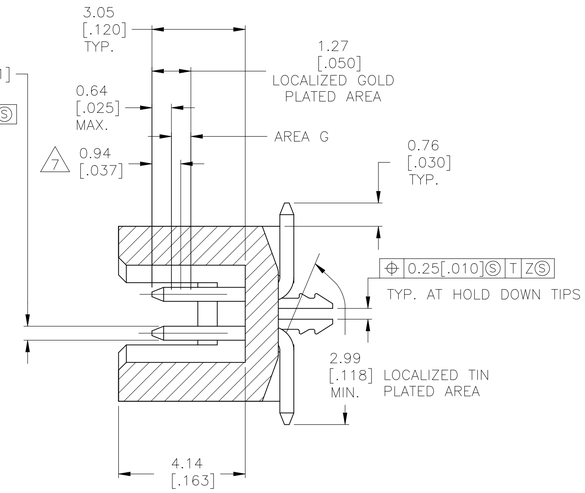

SECTION W–W

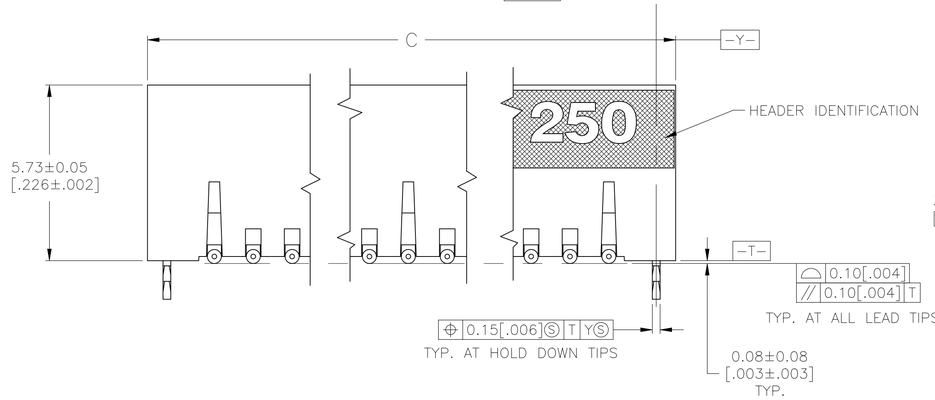

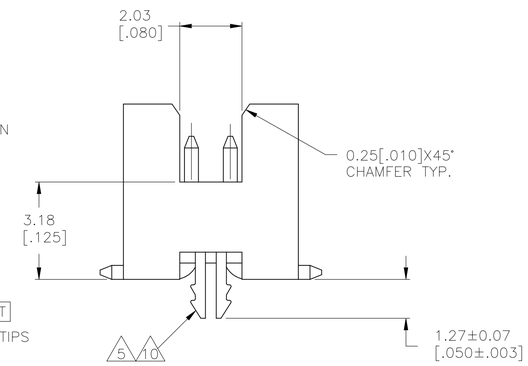

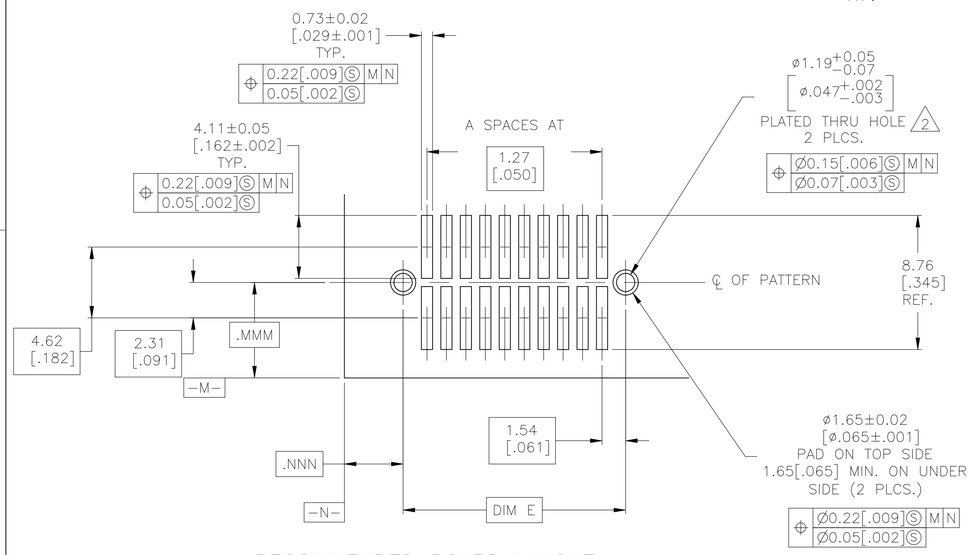

RECOMMENDED BOARD LAYOUT
SCALE–5:1

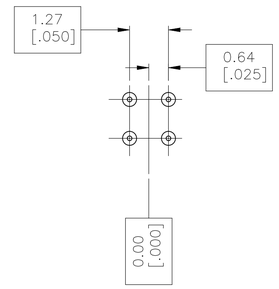

DETAIL P

BASIC DIMENSIONS FOR ODD NUMBER OF SPACES

1. 0.00076[.000030] GOLD AT POINT OF MEASUREMENT, 0.00051[.000020] MIN AT THE END POINTS OF AREA G, (LOCALIZED GOLD PLATE AREA), 0.0038[.000150] TIN–LEAD ON LOCALIZED TIN PLATED AREA, ALL OVER 0.0013[.000050] NICKEL
2. USE 1.32±0.02 [.052±.001] DRILLED HOLE (#55 DRILL). FINISH TO BE TIN OVER 0.02 [.001] MIN COPPER.
3. DIMENSION APPLIES AT BASE OF SHROUD.
4. THE NOTED DIMENSIONS APPLY AT THE MATING FACE OF THE HOUSING.
5. 0.0038 [.000150] TIN–LEAD ON HOLD DOWN,ALL OVER 0.0013 [.000050] NICKEL.
6. IF PLANNING TO USE MORE THAN ONE MATING PAIR OF CONNECTORS TO INTERCONNECT 2 BOARDS, PLEASE REFER TO THE SPACING PARAGRAPH IN APPLICATION SPEC, #114–7010
7. POINT OF MEASUREMENT
8. DIMENSIONS NOTED APPLY FROM THE BASIC DIMENSION LINE (NOT THE CIRCUIT CAVITY CENTER LINE) TO THE SURFACE INDICATED.
9. 0.00076[.000030] GOLD AT POINT OF MEASUREMENT, 0.00051[.000020] MIN AT THE END POINTS OF AREA G, (LOCALIZED GOLD PLATE AREA), 0.0038[.000150] TIN ON LOCALIZED TIN PLATED AREA, ALL OVER 0.0013[.000050] NICKEL.
10. 0.0035[.000150] TIN ON HOLDDOWN, ALL OVER 0.0013[.000050] NICKEL
11. ROHS 2002/95/EC COMPLIANT.
12. OBSOLETE PARTS: OBSOLETE CIS STREAMLINING PER D.RENAUD/D.SINISI

FINISH	E	D	C	B	A	NUMBER OF POSITIONS	PART NUMBER
12 OBSOLETE	9 10	65.33 [2.572]	32.66 [1.286]	66.59 [2.622]	64.05 [2.522]	49	100	11 6–104655–1
	9 10	58.97 [2.322]	29.48 [1.161]	60.24 [2.372]	57.70 [2.272]	44	90	11 ~~6–104655–0~~
	9 10	52.63 [2.072]	26.31 [1.036]	53.89 [2.122]	51.35 [2.022]	39	80	11 5–104655–9
	9 10	46.28 [1.822]	23.13 [.911]	47.54 [1.872]	45.00 [1.772]	34	70	11 5–104655–8
	9 10	39.93 [1.572]	19.96 [.786]	41.19 [1.622]	38.65 [1.522]	29	60	11 5–104655–7
	9 10	33.58 [1.322]	16.78 [.661]	34.84 [1.372]	32.30 [1.272]	24	50	11 5–104655–6
	9 10	27.23 [1.072]	13.61 [.536]	28.49 [1.122]	25.95 [1.022]	19	40	11 5–104655–5
	9 10	20.88 [.822]	10.43 [.411]	22.14 [.872]	19.60 [.772]	14	30	11 5–104655–4
	9 10	14.53 [.572]	7.26 [.286]	15.79 [.622]	13.25 [.522]	9	20	11 5–104655–3
12 OBSOLETE	9 10	11.98 [.472]	5.99 [.236]	13.25 [.522]	10.72 [.422]	7	16	11 ~~5–104655–2~~
	9 10	8.18 [.322]	4.08 [.161]	9.44 [.372]	6.90 [.272]	4	10	11 5–104655–1
OBSOLETE	1 5	65.33 [2.572]	32.66 [1.286]	66.59 [2.622]	64.05 [2.522]	49	100	~~1–104655–1~~
OBSOLETE	1 5	58.97 [2.322]	29.48 [1.161]	60.24 [2.372]	57.70 [2.272]	44	90	~~1–104655–0~~
OBSOLETE	1 5	52.63 [2.072]	26.31 [1.036]	53.89 [2.122]	51.35 [2.022]	39	80	~~104655–9~~
OBSOLETE	1 5	46.28 [1.822]	23.13 [.911]	47.54 [1.872]	45.00 [1.772]	34	70	~~104655–8~~
OBSOLETE	1 5	39.93 [1.572]	19.96 [.786]	41.19 [1.622]	38.65 [1.522]	29	60	~~104655–7~~
OBSOLETE	1 5	33.58 [1.322]	16.78 [.661]	34.84 [1.372]	32.30 [1.272]	24	50	~~104655–6~~
OBSOLETE	1 5	27.23 [1.072]	13.61 [.536]	28.49 [1.122]	25.95 [1.022]	19	40	~~104655–5~~
OBSOLETE	1 5	20.88 [.822]	10.43 [.411]	22.14 [.872]	19.60 [.772]	14	30	~~104655–4~~
OBSOLETE	1 5	14.53 [.572]	7.26 [.286]	15.79 [.622]	13.25 [.522]	9	20	~~104655–3~~
OBSOLETE	1 5	11.98 [.472]	5.99 [.236]	13.25 [.522]	10.72 [.422]	7	16	~~104655–2~~
OBSOLETE	1 5	8.18 [.322]	4.08 [.161]	9.44 [.372]	6.90 [.272]	4	10	~~104655–1~~

THIS DRAWING IS A CONTROLLED DOCUMENT.

DIMENSIONS: mm [INCHES]

TOLERANCES UNLESS OTHERWISE SPECIFIED:
0 PLC ± –
1 PLC ± –
2 PLC ± 0.13[.005]
3 PLC ± –
4 PLC ± –
ANGLES ± 0°30'

MATERIAL
HOUSING: LCP, COLOR–BLACK
POST: PHOS BRONZE
HOLD WOWN: COPPER ALLOY

FINISH: SEE TABLE

DWN KATE HELM 08/07/91
CHK D. GORENC 8/12/91
APVD D. FORKER 8/12/91

PRODUCT SPEC 108–1332
APPLICATION SPEC 114–7010
WEIGHT –

TE Connectivity

NAME: HEADER ASSEMBLY, SURFACE MOUNT, AMPMODU 50/50 GRID (6.35[.250] MATED HEIGHT)

SIZE	CAGE CODE	DRAWING NO	RESTRICTED TO
A1	00779	C–104655	–

CUSTOMER DRAWING | SCALE 10:1 | SHEET 1 OF 1 | REV L4

4805 (1/15)