© 2022 TE Connectivity. All Rights Reserved.

REVISIONS					
P	LTR	DESCRIPTION	DATE	DWN	APVD
	A	INITIAL RELEASE	10SEP2023	J.S	Z.Z
	A1	ECN-24-290823	29OCT2024	J.S	Z.Z
	A2	ECN-25-359904	12MAR2026	J.S	C.W
	A3	ECN-26-384311	19MAY2026	J.S	C.W

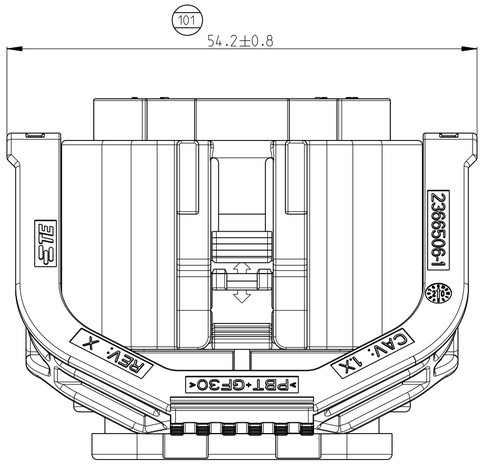

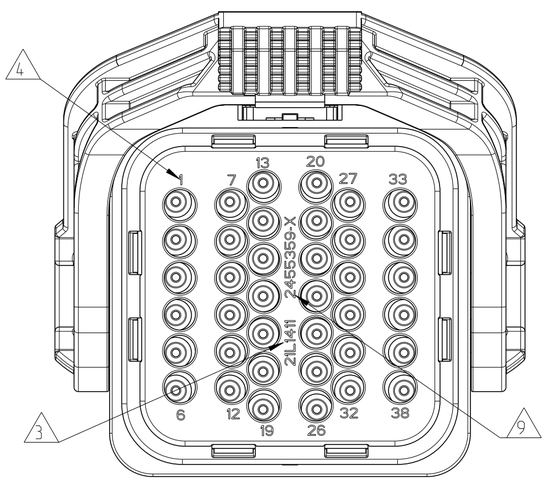

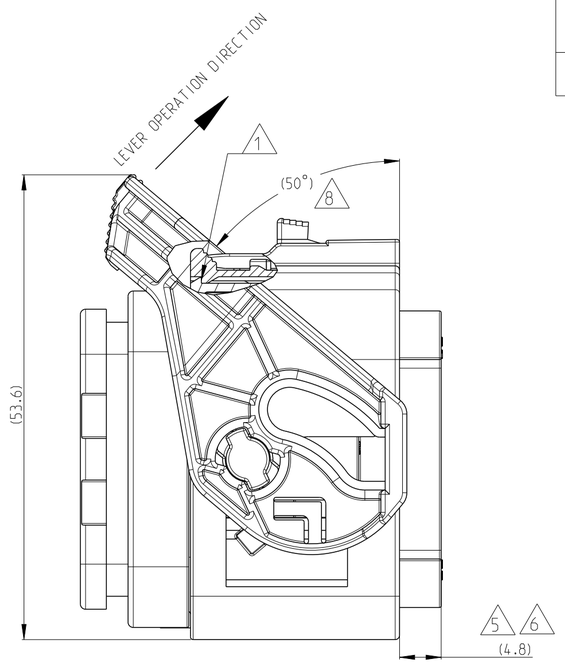

SECTION A-A

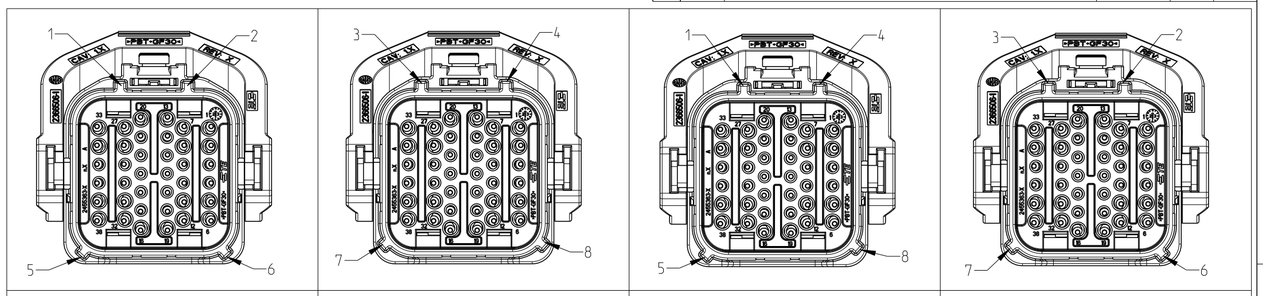

CODING A	CODING B	CODING C	CODING D

1. THIS PLUG MATES WITH TAB HOUSING ASSEMBLY PN 2455360-X, OR 1-2455360-X (X=1, 2, 3, 4 FOR VARIOUS CODE).
2. MATERIAL SEE TABLE
3. DATE CODE: INDENTIFIES THE YEAR, MONTH, DAY AND HOUR OF ASSEMBLY.
   YEAR: FIRST AND SECOND DIGITS(21=2021)
   MONTH: THIRD DIGIT , EXCLUDING I , A=JAN, B=FEB, C=MARCH...(M=DECEMBER)
   DAY: FOURTH AND FIFTH DIGITS(14=14th DAY)
   HOUR: SIXTH AND SEVENTH DIGITS(11=11AM)
4. IDENTIFICATION FOR CABLE PINOUT.
5. TPA AND CPA SEATED ON PRE-LOCK POSITION FOR DELIVERY.
6. PULL TPA TO PRE-LOCK BEFORE TERMINAL INSERTION IN CASE OF TPA BEING HIT TO END-LOCK POSITION.
7. (A3) REFER TO 114-151001/114-151000 FOR DT SIZE 16 TERMINAL APPLICATION SPECIFICATION.
   APPLICABLE TERMINAL PART NUMBERS AND WIRE SIZE:

TERMINAL PN	WIRE SIZE (MM2)	INSULATION WIRE (MM)	PINOUT NUMBER
16#	0.75-2.5	Ø1.7-Ø3.0	ALL

8. LEVER SEATED ON PRE-LOCK POSITION FOR DELIVERY.
9. LASER PRODUCT PN. SUCH AS "--1"MEANS 2455359-1.

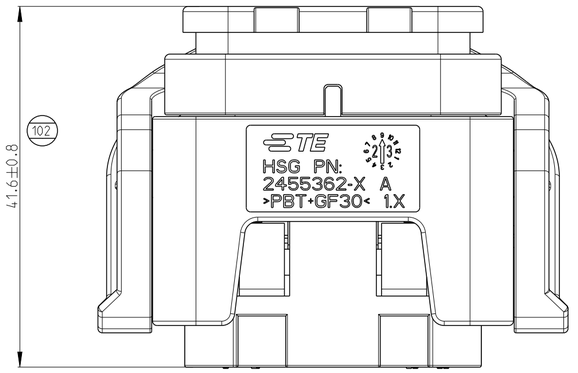

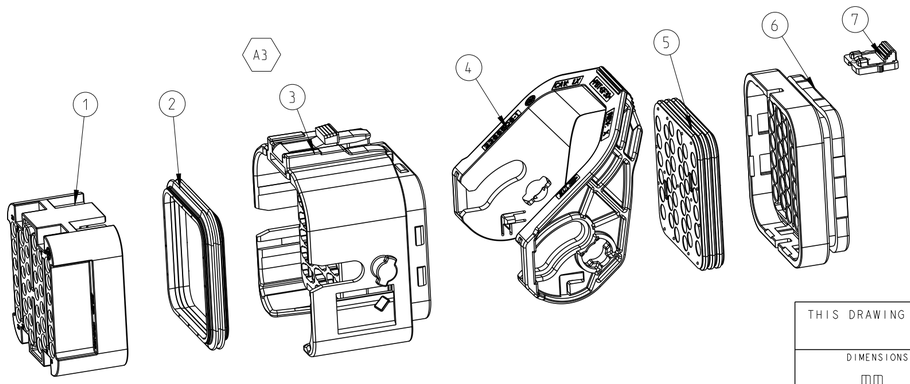

QTY. REQUEST PER ASSY				COLOR	MATERIAL	DESCRIPTION	ITEM NO
1	1	1	1	RED	PBT-GF15	CPA	7
1	-	-	-	BLUE	PBT-GF30	REAR CAP	6
-	1	-	-	GREEN			
-	-	1	-	GREY			
-	-	-	1	BLACK			
1	1	1	1	RUST RED	VMQ	GROMMET	5
1	1	1	1	YELLOW	PBT-GF30	LEVER	4
1	-	-	-	BLUE	PBT-GF30	HOUSING CODING D	3
-	1	-	-	GREEN		HOUSING CODING C	
-	-	1	-	GREY		HOUSING CODING B	
-	-	-	1	BLACK		HOUSING CODING A	
1	1	1	1	RUST RED	VMQ	RADIAL SEAL	2
1	1	1	1	YELLOW	PBT-GF30	TPA	1
A	A	A	A	REVISION OF EACH ASSY PN			
--4	--3	--2	--1	TE ASSEMBLY PN			

THIS DRAWING IS A CONTROLLED DOCUMENT.

DIMENSIONS: mm

TOLERANCES UNLESS OTHERWISE SPECIFIED:
0 PLC ±
1 PLC ±
2 PLC ±
3 PLC ±
4 PLC ±
ANGLES ±

MATERIAL -
-

FINISH -
-

DWN	J.SHANG	10SEP2023
CHK	C.WAN	10SEP2023
APVD	Z.ZHOU	10SEP2023
PRODUCT SPEC	108-101662	
APPLICATION SPEC	114-32209	
WEIGHT	-	

TE Connectivity

NAME: NTS 38P PLUG ASSEMBLY

SIZE	CAGE CODE	DRAWING NO	RESTRICTED TO
A2	00779	C-2455359	-

CUSTOMER DRAWING | SCALE 2:1 | SHEET 1 OF 1 | REV A3