THIS DRAWING IS UNPUBLISHED. RELEASED FOR PUBLICATION 2007
© COPYRIGHT 2007 BY TYCO ELECTRONICS CORPORATION. ALL RIGHTS RESERVED.

LOC	DIST
A1	-

REVISIONS

P	LTR	DESCRIPTION	DATE	DWN	APVD
	D	SEE ECR-07-013183	05JUN2007	HM	GS

KEYING OPTIONS
(SHOWN WITHOUT LEVER)

2-1419158-1

A

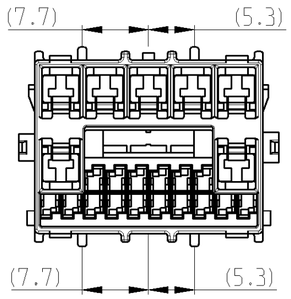

2-1419158-0

B

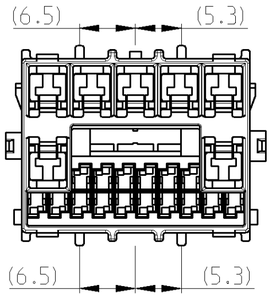

1-1419158-9

C

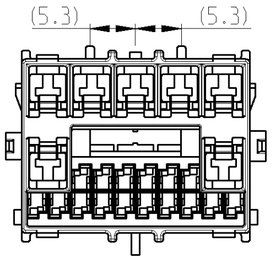

1-1419158-8

D

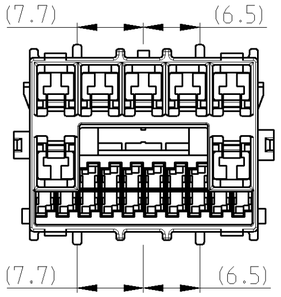

2-1419158-2

E

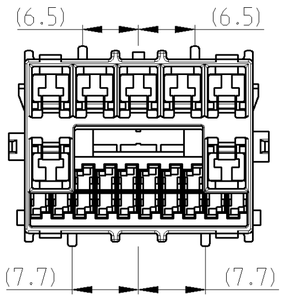

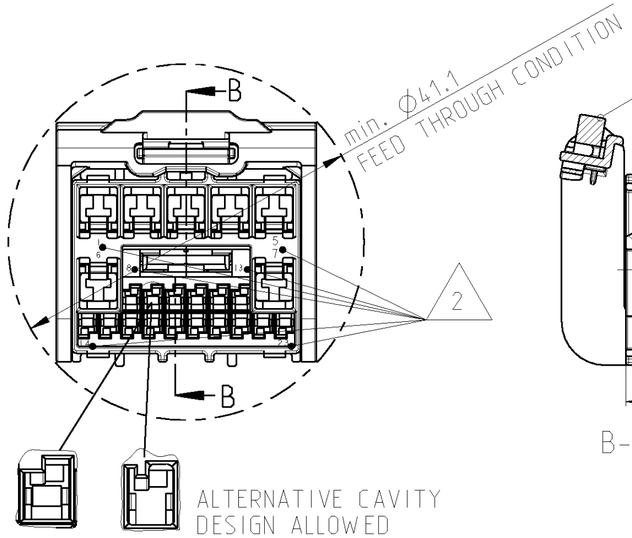

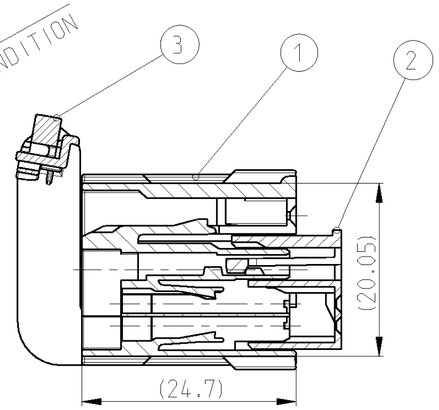

B-B

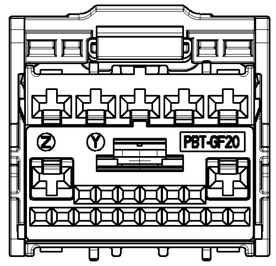

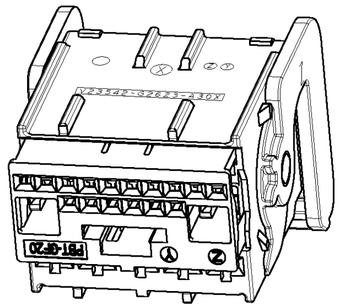

3D VIEW

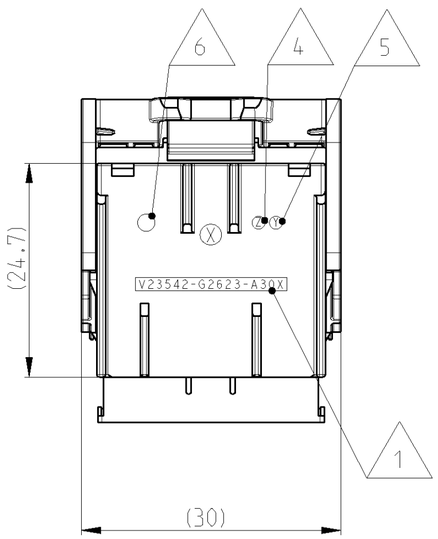

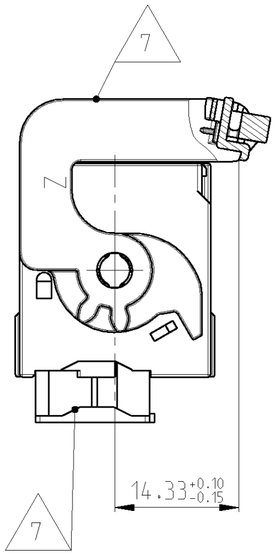

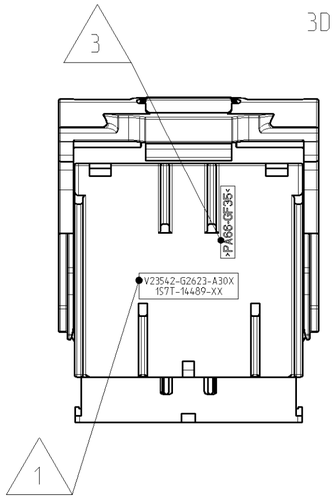

NOTES
Bemerkungen

1. TYCO-EC ORDER NUMBER
   Tyco-EC Bestellnummer
2. CAVITY MARKING
   Kammernummerierung
3. MATERIAL MARKING
   Werkstoffkennzeichnung
4. REVISIONS NUMBER
   Werkzeugaenderungsindex
5. TOOL CAVITY MARKING
   Nestmarkierung
6. PRODUCTION-DATE
   Produktionsdatum
7. LEVER AND SPACER IN PRESET POSITION
   Hebel und Spacer in Vorraststellung
8. PACKAGING: LAYER PACKAGING IN SHIPPING BOX
   Verpackung: Lagenverpackung

COD	TE V- NUMBER	TYCO ELECTRONICS PN	ASSY DESCRIPTION	REV	QTY	DESCRIPTION	MATERIAL	SURFACE COLOR	ITEM NO
E	V23542-G2623-A305	2-1419158-2	23POS. GEM-FEMALE CONNECTOR	D	1	LEVER	PBT-GF20	YELLOW	3
					1	SPACER	PBT-GF20	RED	2
					1	SOCKET HOUSING	PA66-GF35	BROWN	1
D	V23542-G2623-A304	1-1419158-8	23POS. GEM-FEMALE CONNECTOR	D	1	LEVER	PBT-GF20	YELLOW	3
					1	SPACER	PBT-GF20	RED	2
					1	SOCKET HOUSING	PA66-GF35	NATURAL	1
C	V23542-G2623-A303	1-1419158-9	23POS. GEM-FEMALE CONNECTOR	D	1	LEVER	PBT-GF20	YELLOW	3
					1	SPACER	PBT-GF20	RED	2
					1	SOCKET HOUSING	PA66-GF35	BLUE	1
B	V23542-G2623-A302	2-1419158-0	23POS. GEM-FEMALE CONNECTOR	D	1	LEVER	PBT-GF20	YELLOW	3
					1	SPACER	PBT-GF20	RED	2
					1	SOCKET HOUSING	PA66-GF35	GREEN	1
A	V23542-G2623-A301	2-1419158-1	23POS. GEM-FEMALE CONNECTOR	D	1	LEVER	PBT-GF20	YELLOW	3
					1	SPACER	PBT-GF20	RED	2
					1	SOCKET HOUSING	PA66-GF35	GREY	1

THIS DRAWING IS A CONTROLLED DOCUMENT FOR TYCO ELECTRONICS CORPORATION. IT IS SUBJECT TO CHANGE AND THE CONTROLLING ENGINEERING ORGANIZATION SHOULD BE CONTACTED FOR THE LATEST REVISION.

DIMENSIONS: mm

TOLERANCES UNLESS OTHERWISE SPECIFIED:
0 PLC ±-
1 PLC ±-
2 PLC ±-
3 PLC ±-
4 PLC ±-
ANGLES ±-

MATERIAL -
FINISH -

DWN 31.07.2007 H.Meinhardt
CHK 31.07.2007 G.Steinbach
APVD 31.07.2007 G.Steinbach
PRODUCT SPEC -
APPLICATION SPEC -
WEIGHT -

Tyco Electronics
Tyco Electronics AMP GmbH
D-84825 Bensheim

NAME 23 POS. GEM-FEMALE CONNECTOR, ASSY
-
-

SIZE	CAGE CODE	DRAWING NO	RESTRICTED TO
A2	00779	C-1-1419158-8	-

CUSTOMER DRAWING
SCALE 2:1 SHEET 1 OF 1 REV D