© – TE Connectivity. All Rights Reserved.

REVISIONS					
P	LTR	DESCRIPTION	DATE	DWN	APVD
	H6	REVISED PER ECR-25-255998	11SEP2025	SA	DSC

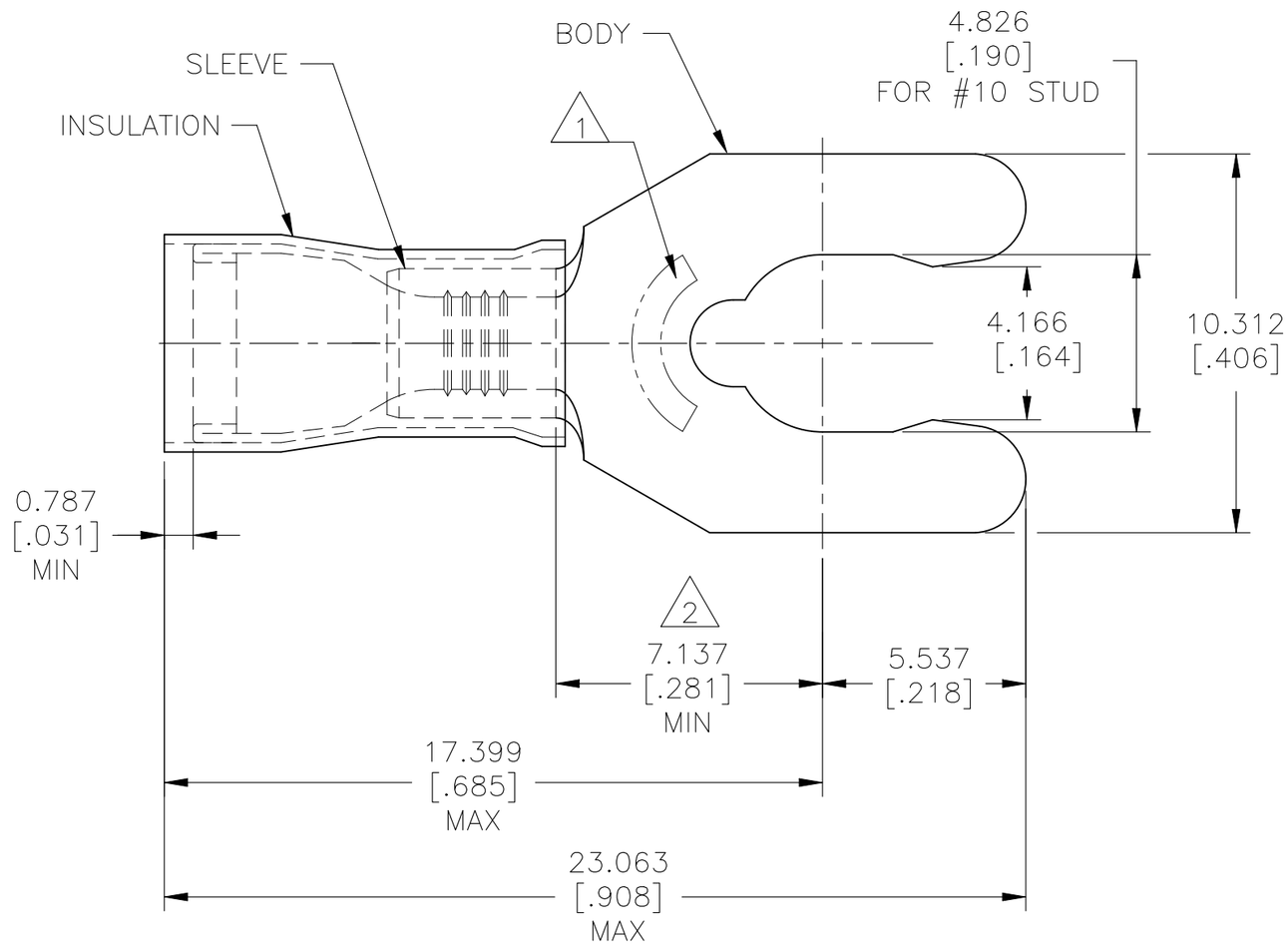

1. STAMP 10S AMP 16-14*, APPROX AS SHOWN.
2. APPLIES FROM EDGE OF METAL WIRE BARREL TO CENTER OF STUD HOLE.
3. BODY MATERIAL THK IS 0.787±0.051[.031±.002]
4. BODY – PHOS BRONZE PER ASTM B-103
   SLEEVE – COPPER PER ASTM B-152
   INSULATION – NYLON
5. BODY – TIN PLATE PER ASTM B545
   SLEEVE – TIN PLATE PER ASTM B545
   INSULATION – COLOR – BLUE

AMP WIRE RANGE	UL Listed FILE E13288	CSA LR7189 Certified
16-14 AWG SOLID OR STRANDED	16-14 AWG SOLID OR STRANDED	16-14 AWG SOLID OR STRANDED

WIRE INSULATION OD	QTY	PACKAGE TYPE	PART NO
2.921-4.623[.115-.182]	100	LOOSE PIECE, BOX	9-52937-1
2.921-4.318[.115-.170]	1 KIT = 250 PIECES	LOOSE PIECE	6-52937-0
2.921-4.623[.115-.182]	4000	-2 ON TAPE	52937-3
2.921-4.623[.115-.182]	1000	LOOSE PIECE	52937-2
2.921-4.318[.115-.170]	4000	-1 ON TAPE	52937-1
2.921-4.318[.115-.170]	1000	LOOSE PIECE	52937

CUSTOMER SERVICE SYSTEMS

FOR ADDITIONAL PRODUCT INFORMATION OR COPIES OF DRAWINGS AND TECHNICAL DOCUMENTS	PRODUCT INFORMATION CENTER 1-800-522-6752
FOR APPLICATION TOOLING INFORMATION	TOOLING ASSISTANCE CENTER 1-800-722-1111
FOR ORDER ENTRY	1-800-526-5142

THIS DRAWING IS A CONTROLLED DOCUMENT FOR AMP INCORPORATED. IT IS SUBJECT TO CHANGE AND THE CONTROLLING ENGINEERING ORGANIZATION SHOULD BE CONTACTED FOR THE LATEST REVISION.

MAX RECOMMENDED OPERATING TEMPERATURE: 105°C [221°F]

VOLTAGE RATING: 300 V MAX

CIRCULAR MIL AREA: 1.04-2.62mm² [2,050-5,180] SOLID OR STRANDED

THIS DRAWING IS A CONTROLLED DOCUMENT.

DIMENSIONS: mm [INCHES]

TOLERANCES UNLESS OTHERWISE SPECIFIED:
0 PLC ± –
1 PLC ± –
2 PLC ± –
3 PLC ± 0.127[.005]
4 PLC ± –
ANGLES ± 5°

MATERIAL 4

FINISH 5

DWN	jr ruth	19MAR10
CHK	T MICHIELUTTI	19MAR10
APVD	T MICHIELUTTI	19MAR10
PRODUCT SPEC	UL 486 A-B	
APPLICATION SPEC	114-2157	
WEIGHT	–	

TE Connectivity

NAME: TERMINAL, SHORT SPRING SPADE, PIDG, WIRE SIZE: 16-14 AWG

SIZE	CAGE CODE	DRAWING NO	RESTRICTED TO
A3	00779	C-52937	–

CUSTOMER DRAWING | SCALE 6:1 | SHEET 1 OF 1 | REV H6