REVISIONS					
P	LTR	DESCRIPTION	DATE	DWN	APVD
	A	INITIAL RELEASE	28AUG23	M.X	F.P
	A1	ECN-23-229552	06SEP23	M.X	F.P
	A2	ECN-24-274533	17JUL24	M.X	F.P
	A3	ECN-25-320674	27MAY25	M.X	F.P

CODINGS

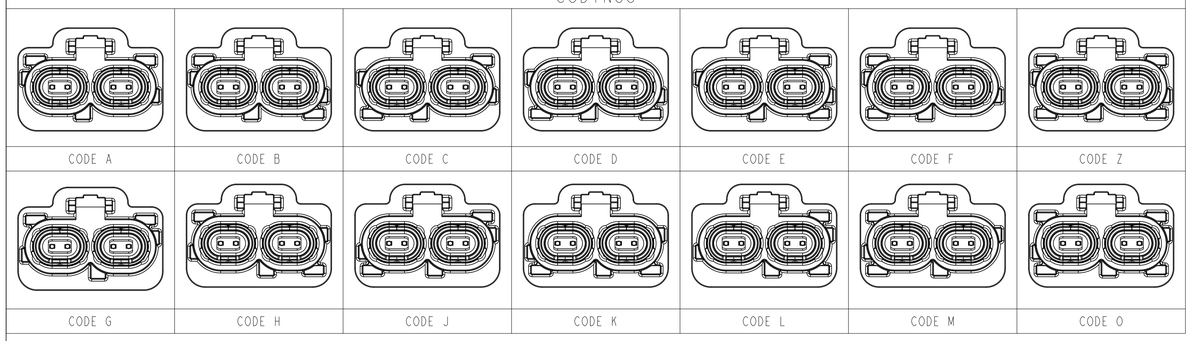

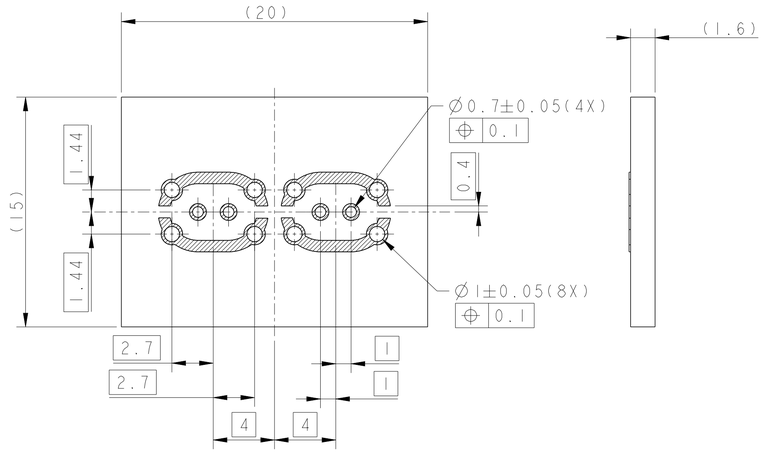

RECOMMENDED PCB LAYOUT

1 3-2464105-4 AS SHOWN

2 ALL DIMENSIONS IN ( ) FOR INFORATION ONLY

3 SOLDERING PROCESS: LEAD FREE REFLOW SOLDERING IN REFERENCE TO JEDEC J-STD-020D

4 PACKAGING: TAPE REEL.

5 PINNING NO.

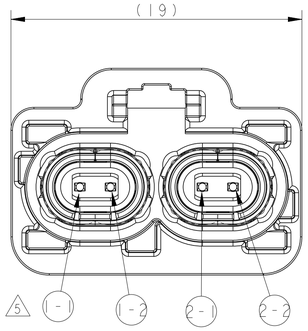

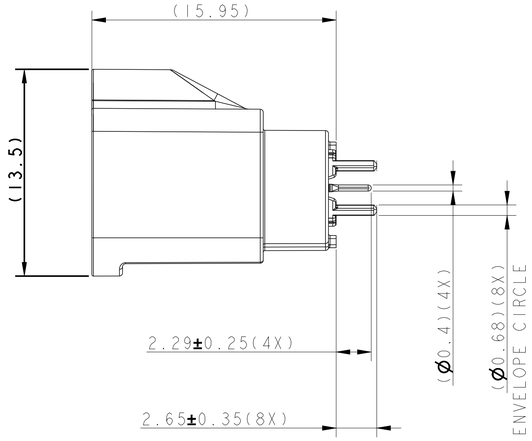

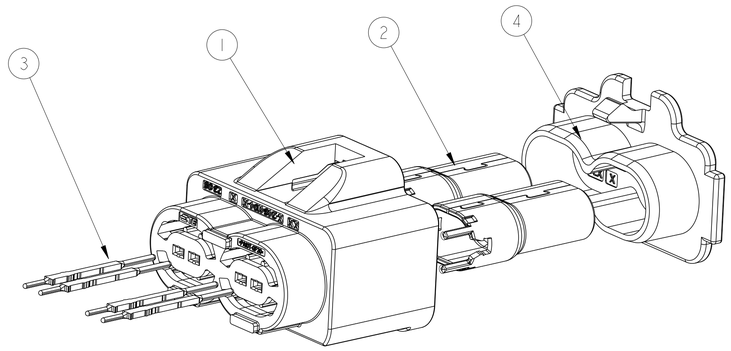

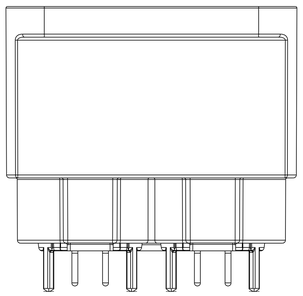

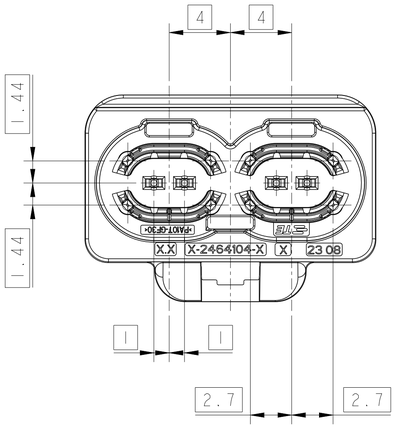

1	-	PICKUP CAP	HIGH TEMP POLYAMIDE	JET BLACK / 9005	4
4		CENTER PIN	COPPER ALLOY	0.38µm MIN GOLD, 1.3µm MIN NICKEL ONINTERFACE END; 3.0µm MIN TIN, 1.3µm MIN NICKEL ON SOLDER END;	3
2		OUTER SHEILD	COPPER ALLOY	3.0µm MIN TIN, 1.3µm MIN NICKEL	2

QUANTITY																										CODE	DESCRIPTION	MATERIAL	FINISH COLOR, SIMILAR RAL	ITEM NO.
												1													1	Z	CODING HSG	HIGH TEMP POLYAMIDE	WATER BLUE / 5021	1
																								1		O			LIGHT GREEN / 6027	
											1												1			M			PASTEL ORANGE / 2003	
										1												1				L			YELLOW GREEN / 6018	
									1												1					K			CURRY / 1027	
								1												1						J			BEIGE / 1001	
							1												1							H			LIGHT PINK / 3015	
						1												1								G			PLATINUM GREY / 7036	
					1												1									F			NUT BROWN / 8011	
				1												1										E			MAY GREEN / 6017	
			1												1											D			CLARET VIOLET / 4004	
		1												1												C			LIGHT BLUE / 5012	
	1												1													B			PURE WHITE / 9010	
1												1														A			JET BLACK / 9005	
2464105-1	2464105-2	2464105-3	2464105-4	2464105-5	2464105-6	2464105-7	2464105-8	2464105-9	1-2464105-0	1-2464105-1	1-2464105-2	1-2464105-3	1-2464105-4	2-2464105-1	2-2464105-2	2-2464105-3	2-2464105-4	2-2464105-5	2-2464105-6	2-2464105-7	2-2464105-8	2-2464105-9	3-2464105-0	3-2464105-1	3-2464105-2	3-2464105-3	3-2464105-4	ASSY NO.			
A	B	C	D	E	F	G	H	J	K	L	M	N	Z	A	B	C	D	E	F	G	H	J	K	L	M	N	Z	ASSY CODE			
A	A	A	A	A	A	A	A	A	A	A	A	A	A	A	A	A	A	A	A	A	A	A	A	A	A	A	A	REVISION			

THIS DRAWING IS A CONTROLLED DOCUMENT.

DIMENSIONS: mm

TOLERANCES UNLESS OTHERWISE SPECIFIED:
0 PLC ±-
1 PLC ±0.3
2 PLC ±0.2
3 PLC ±
4 PLC ±
ANGLES ±-

MATERIAL - -
FINISH - -

DWN ML.XU 17JUL2024
CHK A.HUANG 17JUL2024
APVD F.PAN 17JUL2024
PRODUCT SPEC -
APPLICATION SPEC -
WEIGHT -

TE Connectivity

NAME GEMnet HEADER,2P 180DEG

SIZE A1 | CAGE CODE 00779 | DRAWING NO C-2464105 | RESTRICTED TO -

CUSTOMER DRAWING | SCALE 7:1 | SHEET 1 OF 1 | REV A3

4805 (3/13)