THIS DRAWING IS UNPUBLISHED. RELEASED FOR PUBLICATION 2016
© COPYRIGHT 2016 BY - ALL RIGHTS RESERVED.

2378550-X AS SHOWN

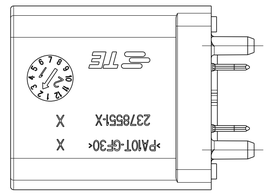

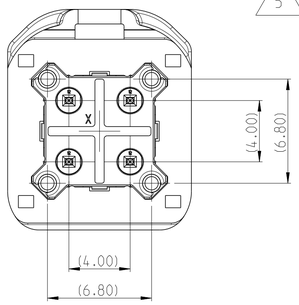

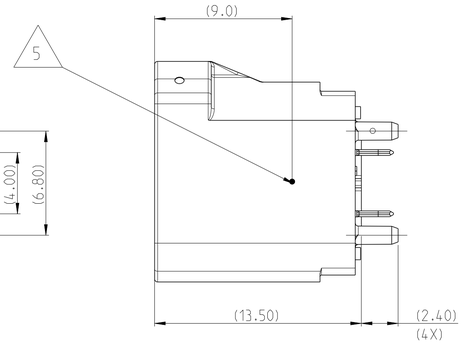

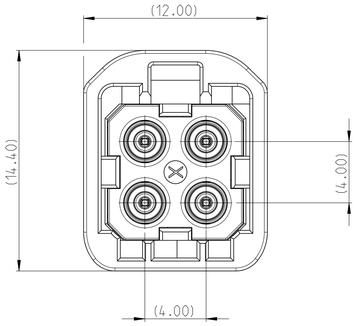

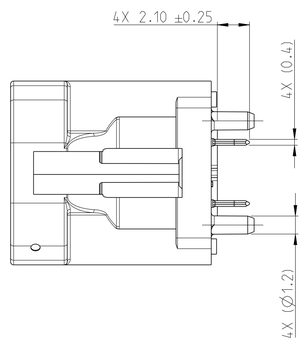

ONLY FOR INFORMATION
PCB LAYOUT RECOMMENDED

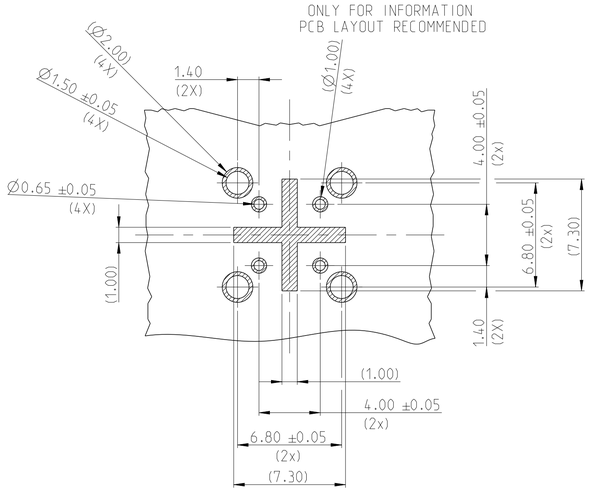

REVISIONS					
P	LTR	DESCRIPTION	DATE	DWN	APVD
	A	INITIAL RELEASE	30JUN21	D.Z	I.Y
	A1	ECN-22-149493	24MAR22	M.G	C.P

1 DETAILS OF DESIGN ARE LEFT TO TE CONNECTIVITY

2 PACKAGING: TAPE AND REEL

3 MATE-AX MATING/UNMATING PLUG HOUSING ASSEMBLY ACC. TO PN:2298721-* OR PLEASE CONTACT TE CONNECTIVITY.

4 ALL DIMENSIONS IN BRACKETS () FOR INFORMATION ONLY

5 CENTER OF GRAVITY

6 AS SHOWN CODING A

1-2378550-X OUTLINE DIMENSIONS AS SHOWN

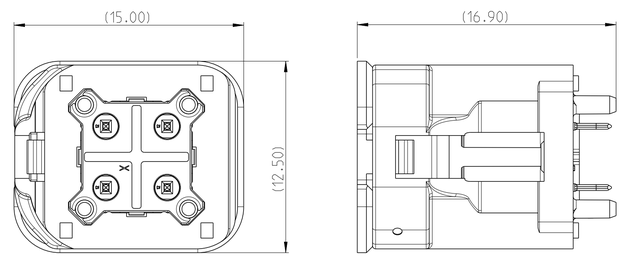

5:1

2378550-X AS SHOWN 2:1	1-2378550-X AS SHOWN 2:1	CODE	A	B	C	D	E	F	Z	A	B	C	D	E	F	Z
		REV.	A	A	A	A	A	A	A	A	A	A	A	A	A	A
		TE PART No. SERIAL	2378550-1	2378550-2	2378550-3	2378550-4	2378550-5	2378550-6	2378550-9	1-2378550-1	1-2378550-2	1-2378550-3	1-2378550-4	1-2378550-5	1-2378550-6	1-2378550-9
5	PICK-UP CAP	NYLON	-	-	-	-	-	-	-	1	1	1	1	1	1	1
4	CONTACT PIN	COPPER ALLOY	SOLDER SIDE: MIN. 3µm Sn OVER Ni INTERFACE SIDE: MIN. 2µm Ag OVER Ni	4	4	4	4	4	4	4	4	4	4	4	4	4
3	CAVITY BLOCK	NYLON	-	4	4	4	4	4	4	4	4	4	4	4	4	4
2	SHIELDING BODY	Zn ALLOY	-	1	1	1	1	1	1	1	1	1	1	1	1	1
1	CODING COVER, CODE-Z	NYLON	WATERBLUE						1							1
1	CODING COVER, CODE-F		NUT-BROWN					1							1	
1	CODING COVER, CODE-E		MAY GREEN				1							1		
1	CODING COVER, CODE-D		CLARET VIOLET			1							1			
1	CODING COVER, CODE-C		LIGHT BLUE			1						1				
1	CODING COVER, CODE-B		PURE WHITE		1						1					
1	CODING COVER, CODE-A		JET BLACK	1						1						
ITEM	DESCRIPTION	MATERIAL	COLOUR	COMPONENTS QUANTITY PER ASSEMBLY												

CODINGS, 2:1

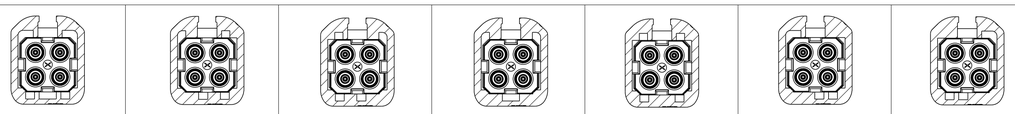

CODING Z	CODING A	CODING B	CODING C	CODING D	CODING E	CODING F

THIS DRAWING IS A CONTROLLED DOCUMENT.

DIMENSIONS: mm

TOLERANCES UNLESS OTHERWISE SPECIFIED:
0 PLC ±-
1 PLC ±0.5
2 PLC ±0.3
3 PLC ±-
4 PLC ±-
ANGLES ±-

MATERIAL - -
FINISH - -

DWN	M.Gao	24MAR2022
CHK	D.ZHU	24MAR2022
APVD	C.PAN	24MAR2022
PRODUCT SPEC	-	
APPLICATION SPEC	-	
WEIGHT	-	

TE Connectivity

NAME MATE-AX HDR, ASSY, 4P, 180DEG UNSEALED
-

SIZE	CAGE CODE	DRAWING NO	RESTRICTED TO
A1	00779	C-2378550	-

CUSTOMER DRAWING | SCALE 5:1 | SHEET 1 OF 1 | REV A1

4805 (3/13)