NUMBER 179276

3rd ANGLE PROJECTION

METRIC

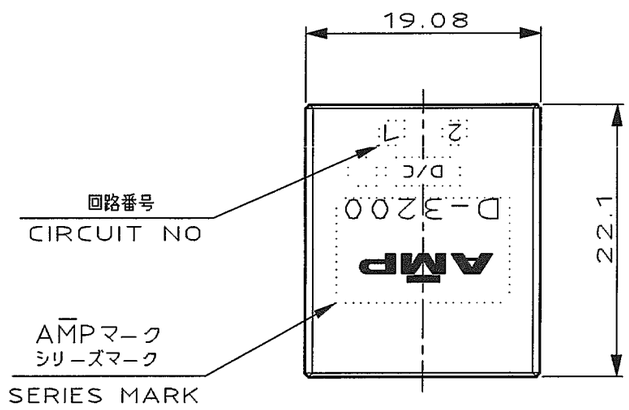

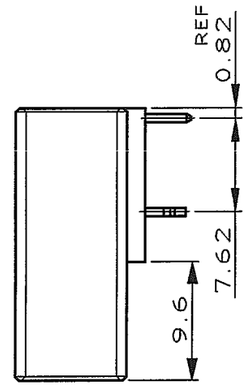

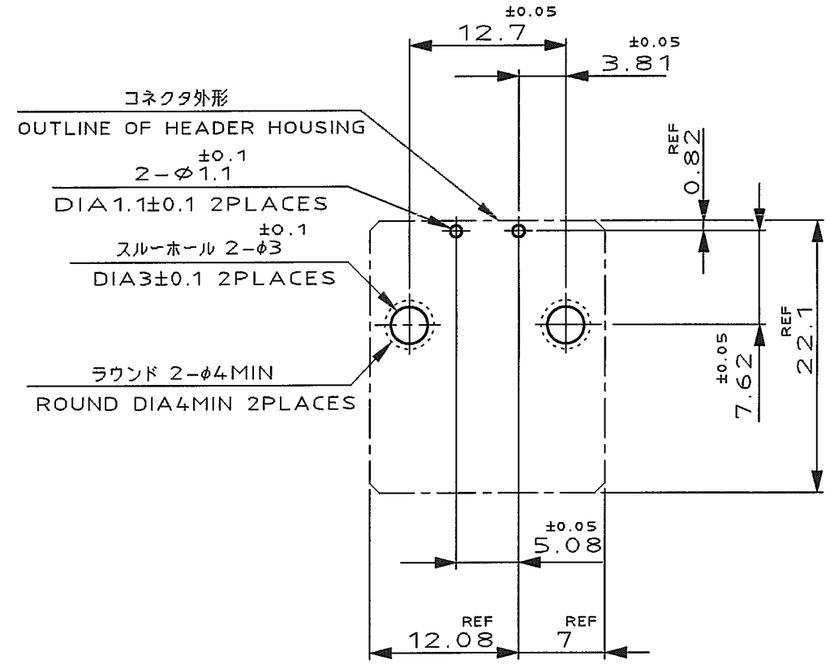

推奨基板取付け穴寸法

PC 基板厚：1.6±0.1
（非累積公差）
（コネクタ搭載面）

RECOMEND PC BOARD HOLE PATTERN
PC BOARD THICKNESS:1.6±0.1
(NOT ACCUMULATE TOLERANCE)
(CONNECTOR MOUNT SIDE)

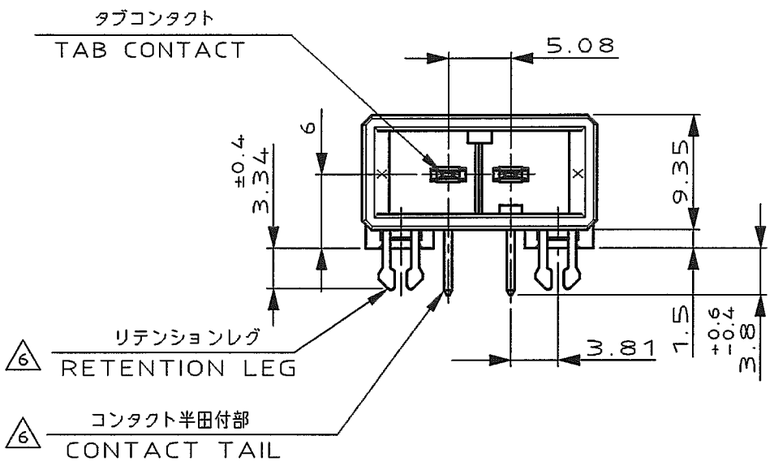

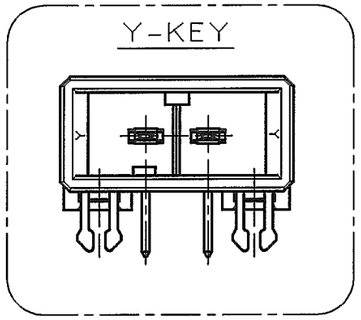

NOTES

1. MATERIAL:HOUSING:GLASS FILED THERMO PLASTIC,POLYESTER
CONTACT:COPPER ALLOY
RETENTION LEG:COPPER ALLOY

2. FINISH(CONTACT AREA): 0.38μm PdNi & Au PLATING OVER NICKEL

3. FINISH(CONTACT AREA): 0.76μm PdNi & Au PLATING OVER NICKEL

4. FINISH(CONTACT AREA):2.0 μmMIN TIN PLATED OVER NICKEL

~~5. FINISH(RETENTION LEG): TIN-LEAD PLATED (CONTACT TAIL) OVER NICKEL~~

6. FINISH(RETENTION LEG): TIN PLATED (CONTACT TAIL) OVER NICKEL

7. OBSOLETE PARTS: OBSOLETE CIS STREAMLINING PER D.RENAUD/D.SINISI

7 OBSOLETE	6	4	~~2-179276-5~~	Y
	6	3	2-179276-3	Y
	6	2	2-179276-2	Y
	6	4	1-179276-5	X
	6	3	1-179276-3	X
	6	2	1-179276-2	X
(FINISH)			製品番号 (PART NO.)	KEY

LTR	REVISION RECORD	DR	CHK	DATE
C	REVISED PER ECR-25-250788	F.Z	R.B	16JAN 2025
B2	REVISED PER ECO-11-005030	RK	HMR	22MAR11

TE Connectivity

WIRE RANGE ~~mm²(AWG -)~~	INSULATION DIA ~~- mmφ~~
MATERIAL SEE NOTE 注記参照	FINISH SEE NOTE 注記参照
DR. 1 DEC 93 N.Matsubara	DE. 1 DEC 93 N.Matsubara
CHK. 13 DEC 93 S.MANABE	APP. 13 DEC 93 S.MANABE

NAME
2 POS SINGLE ROW
HORIZONTAL HDR ASS'Y FOR DYNAMIC D-3200

一般公差 (GENERAL TOLERANCE)
10以下 ±0.2
10を超え 30以下 ±0.3
30を超え100以下 ±0.4
角度 ±3°

SIZE	LOC	NUMBER
A3	J	C-179276
SCALE 2-1	REV. C	SHEET 1 OF 1

(CUSTOMER DRAWING) 顧客用図面

DIMENSIONS IN MILLIMETERS. DO NOT SCALE PRINT

PRINT DIST