THIS DRAWING IS UNPUBLISHED. RELEASED FOR PUBLICATION -,- .
© COPYRIGHT - By - ALL RIGHTS RESERVED.

REVISIONS

P	LTR	DESCRIPTION	DATE	DWN	APVD
	CU12	REVISED PER ECR-25-265653	18DEC2025	BN	LD

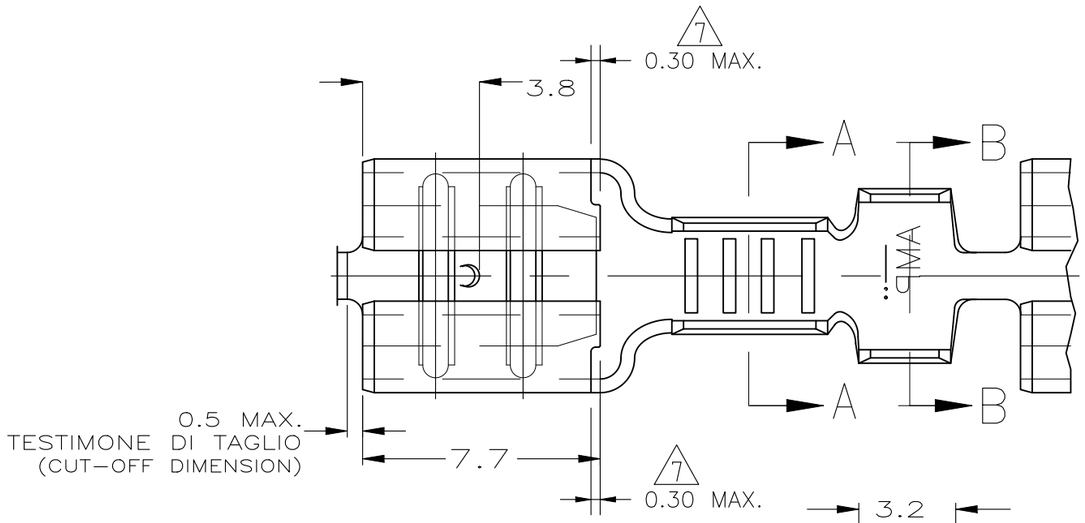

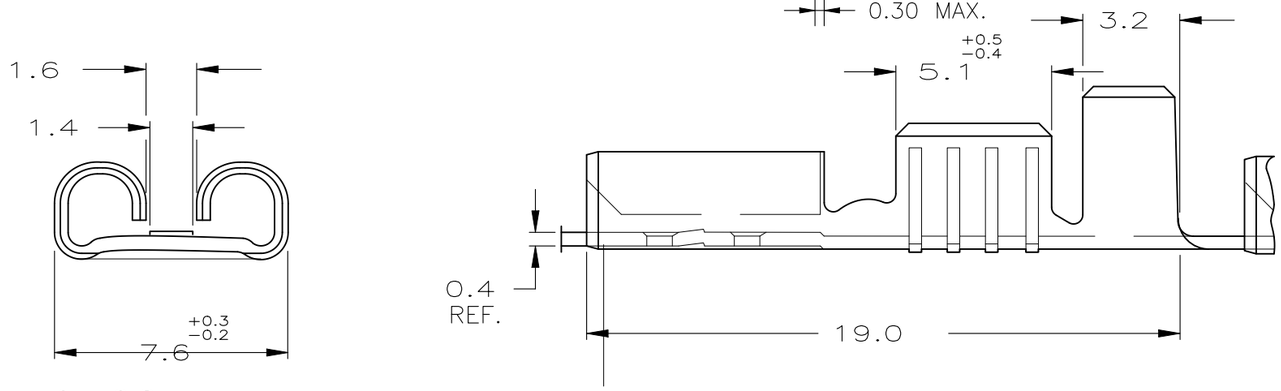

for 0.8 mm tab thickness

1) STATO DI FORNITURA – SCALA 1:1
(SUPPLY CONDITION – SCALE 1:1)

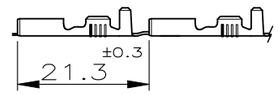

SENSO DI USCITA DEL TERMINALE DALLA BOBINA
(DIRECTION OFF TOP OF REEL)

2) SPECIFICA DI PRODOTTO 108-20019
(PRODUCT SPEC. 108-20019)
SPECIFICA DI APPLICAZIONE 114-20023
(APPLICATION SPEC. 114-20023).

3) PER LE VERSIONI IN PEZZI SCIOLTI VEDERE DISEGNO 160304
(FOR LOOSE PIECE VERSION SEE DRAWING 160304).

4) 115-16-1, GIUNZIONE MEDIANTE SALDATURA
(115-16-1, SPLICE FREE).

5 BOBINATO CON CARTA INTERPOSTA
(REELED WITH INTERLEAVE PAPER STRIP).

6 OBSOLETE PARTS: OBSOLETE CIS STREAMLINING PER D.RENAUD/D.SINISI

7 STEP IS ALLOWED BY 0.3mm MAX.
IT DOES NOT HAVE IMPACT ON PRODUCT FUNCTIONALITY.

NOTE	FINITURA / COLORE (FINISH / COLOUR)	MATERIALE (MATERIAL)	NUMERO (PART NO)	REV
5	STAGNATO (TIN PLATED)	BRONZO FOS. (PH. BRONZE)	9-160256-9	CU9
6 OBSOLETE 5	NUDO (UNPLATED)	BRONZO FOS. (PH. BRONZE)	4-160256-9	CU
	ARGENTATO (SILVER PLATED)	OTTONE (BRASS)	4-160256-7	CU
	NUDO (UNPLATED)	BRONZO FOS. (PH. BRONZE)	4-160256-5	CT
5	PRE NICHELATO (PRE NICKEL PLATED)	ACCIAIO (STEEL)	4-160256-2	CT
	STAGNATO (TIN PLATED)	BRONZO FOS. (PH. BRONZE)	3-160256-1	CT
	NUDO (UNPLATED)	BRONZO FOS. (PH. BRONZE)	2-160256-8	CT
5	STAGNATO (TIN PLATED)	OTTONE (BRASS)	2-160256-2	CU
	NUDO (UNPLATED)	OTTONE (BRASS)	2-160256-1	CT
6 OBSOLETE	PRE NICHELATO (PRE NICKEL PLATED)	ACCIAIO (STEEL)	0-160256-5	CT

SEZIONE A-A
(SECTION A-A)

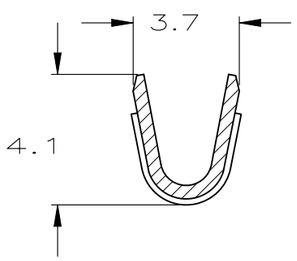

SEZIONE B-B
(SECTION B-B)

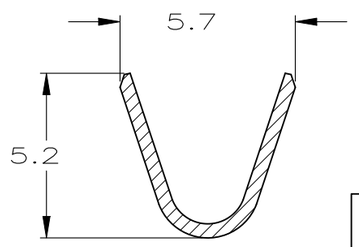

DIAM. ISOLANTE (INS. DIA. RANGE)	RANGO FILO (WIRE RANGE)
3.0-4.3mm DIA.	1.0-2.5 mm2

THIS DRAWING IS A CONTROLLED DOCUMENT.

DIMENSIONS: mm

TOLERANCES UNLESS OTHERWISE SPECIFIED:
0 PLC ± 0.3
1 PLC ± 0.3
2 PLC ± -
3 PLC ± -
4 PLC ± -
ANGLES 2° ±

MATERIAL -
FINISH -

DWN H. YAALI 27 JAN 2000
CHK C. TARTARI 26Jan2000
APVD -
PRODUCT SPEC -
APPLICATION SPEC -
WEIGHT 0.000000

TE Connectivity Ltd.

NAME
FASTON® Connector,
.250 sr. REC. CONTACT.

SIZE	CAGE CODE	DRAWING NO	RESTRICTED TO
A3	00779	C-160256	-

CUSTOMER DRAWING | SCALE 5:1 | SHEET 1 OF 1 | REV CU12