BILL OF MATERIALS		
ITEM	QTY.	**Description**
1	1	BODY, CONNECTOR, RP-SMA, BRASS, RG-178
2	1	PIN, BECU, KNUR, SOLDER, RG-178, GOLD
3	1	SPAC, SUPPORT, PTFE, RG-178
4	1	COLLAR, SHIELD, SOLDER, BRASS, GOLD
5	20mm	HEAT SHRINK, PE, ID Ø3mm

REVISIONS			
REV	DESCRIPTION	DATE	APPV
A	NEW FRAME; ADD HEAT SHRINK	4/26/10	CJ
B	UPDATED DRAWING AND DIMENSIONS; ADDED NEW TITLE BLOCK	2-JUL-12	SAH
C	REDRAWN, UPDATED SOLID MODELS	AJVM 3/7/23	

ASSEMBLY INSTRUCTIONS:

1. STRIP CABLE TO RECOMMENDED DIMENSIONS.
2. SLIP HEAT SHRINK ONTO STRIPPED CABLE.
3. SOLDER THE GROUNDING COLLAR [FN4] ONTO THE BRAID.
4. PLACE SPACER [FN3] ONTO CENTER CONDUCTOR.
5. SOLDER OR CRIMP PIN [FN2] ONTO CENTER CONDUCTOR.
6. INSERT PIN AND SPACER THROUGH GROUNDING COLLAR [FN4] AND OVER BRAID.
7. INSERT ASSEMBLY INTO [FN1] BODY UNTIL THE TOP OF THE PIN IS FLUSH OR SLIGHTLY PROUD OF BODY.
8. SOLDER OR CRIMP KNURELED END TO GROUNDING COLLAR.
9. SLIDE HEAT SHRINK OVER ASSEMBLY AND SHRINK IN PLACE.

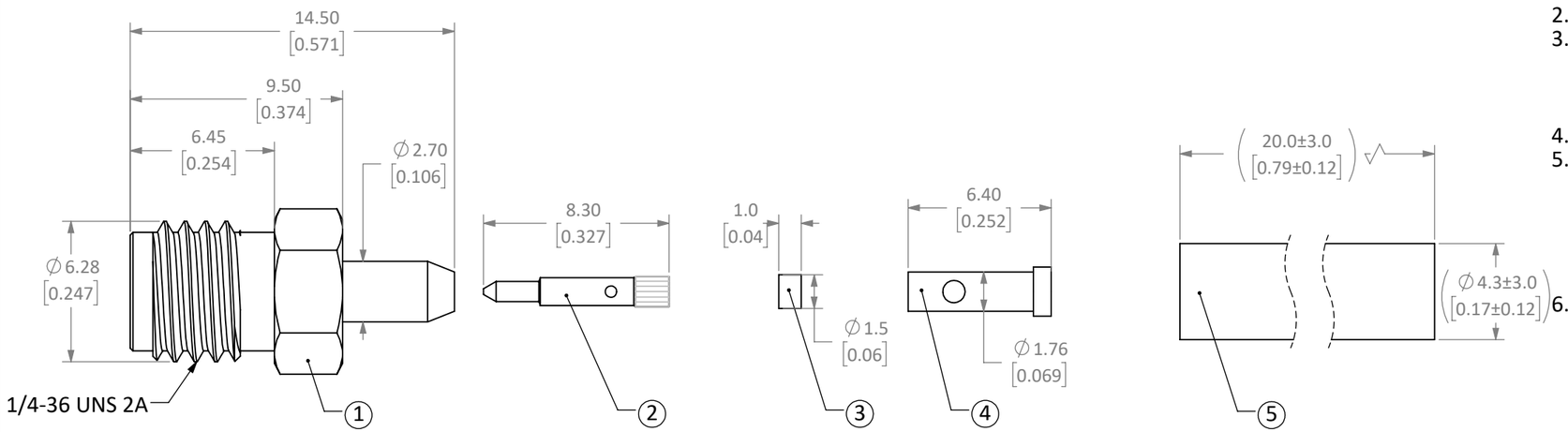

NOTES: (UNLESS OTHERWISE SPECIFIED)

1. ALL DIMENSIONS ARE IN MILLIMETERS [IN].
2. DIMENSIONS APPLY AFTER FINISHING.
3. MANUFACTURE TO BE COMPLIANT WITH EU RoHS DIRECTIVE, USE MATERIALS THAT DO NOT CONTAIN REACH SUBSTANCES OF VERY HIGH CONCERN >1000ppm, AND USE DRC CONFLICT-FREE SOURCED MATERIALS.
4. BREAK AND DEBURR SHARP EDGES .02mm
5. ELECTRICAL:
   1. IMPEDANCE: 50Ω
   2. INSULATION: 5000MΩ
   3. VOLTAGE: WORKING 335V RMS [750V RMS MAX]
   4. CONTACT RESISTANCE: PIN: <3mΩ OUTER: <2.5mΩ
   5. VSWR: 1.12 + .02f
6. MECHANICAL:
   1. MOUNTING: FREE HANGING [IN-LINE]
   2. INTERFACE: SMA IAW MIL-STD-348
   3. DURABILITY: 500 CYCLES
   4. TORQUE MAX: .57 N/m [5.0 IN/LBS] MAX
   5. WRENCH: 6.35mm [1/4 IN]
7. ENVIRONMENTAL: IAW MIL-STD-202
   1. SALT FOG: ASTM B-117
   2. THERMAL: 107b
   3. VIBRATION: 204d
   4. SHOCK: 213i
   5. TEMP: -55ºC- +155ºC MAX

CABLE PREPARATION

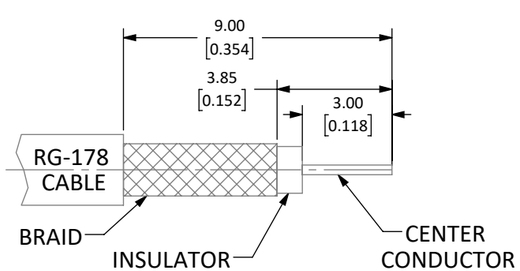

WARNING: THIS DRAWING CONTAINS PROPRIETARY INFORMATION THAT IS THE SOLE PROPERTY OF LINX TECHNOLOGIES, AND SHALL BE TREATED AS SUCH. NO DISCLOSURE OR REPRODUCTION OF THIS DOCUMENT IS PERMITTED, IN WHOLE OR IN PART, WITHOUT THE EXPRESS WRITTEN PERMISSION OF LINX TECHNOLOGIES OR ITS DESIGNATED AGENTS.

TE connectivity
159 ORT LANE
MERLIN, OR 97532

TITLE:
RP-SMA FEMALE CABLE END CRIMP FOR RG-178 CABLE

MATERIAL:
WEIGHT:
FINISH:

INTERPRET DIMENSIONS AND TOLERANCES PER ASME Y14.5.
.X ±.2
.XX ±.10
.XXX ±.050
ANGLES: ±1°
SURFACE: 32
PROJECTION:

DRAWN: B.MURPHY DT: 2-JUL-12
ENGR: S.HOGAN DT: 2-JUL-12

SIZE: B
DWG. NO.: C-CONREVSMA011-R178
REV: A
SCALE: 4:1
DO NOT SCALE DRAWING
SHEET 1 OF 1

LDCFDFB_B