THIS DRAWING IS UNPUBLISHED. RELEASED FOR PUBLICATION - ,- .
© COPYRIGHT - By - ALL RIGHTS RESERVED.

LOC	DIST
GP	00

REVISIONS

P	LTR	DESCRIPTION	DATE	DWN	APVD
	H1	REVISED PER ECO-11-004835	11MAR11	RK	HMR

EJECTION LATCHES OMITTED IN THIS VIEW FOR CLARITY

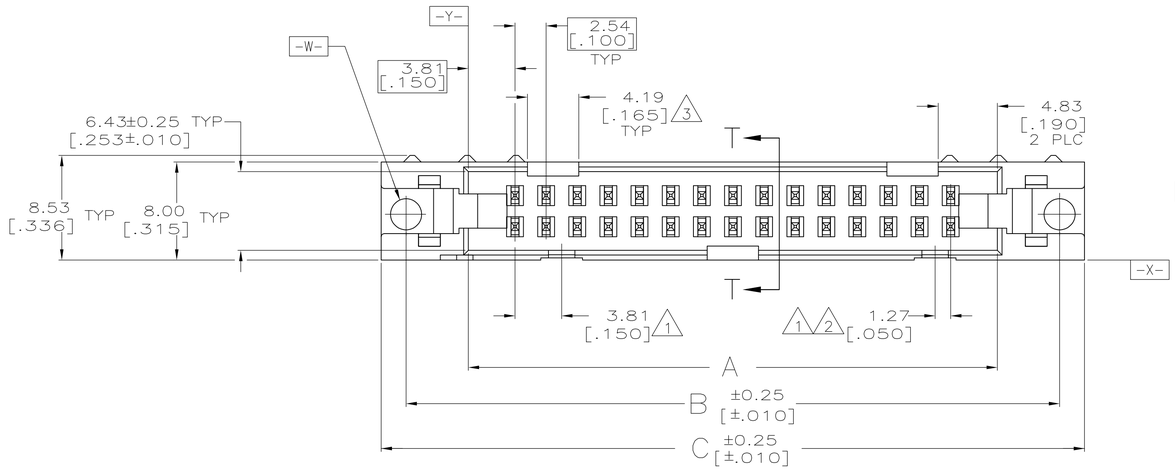

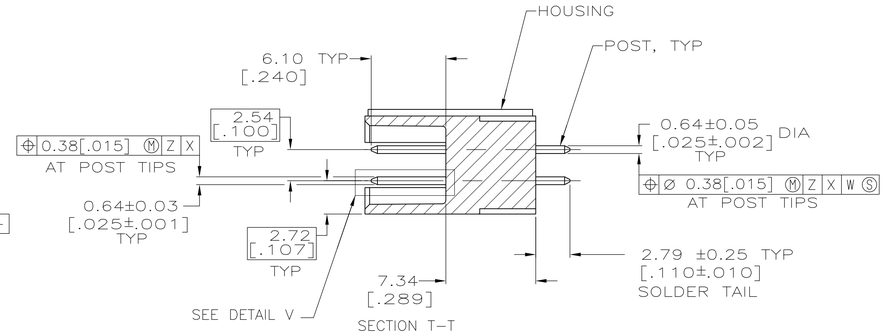

1. COORDINATE DIMENSION APPLIES FROM BASIC LOCATION.
2. 10 AND 14 POSITION SIZES CONTAIN ONLY ONE SLOT FOR SNAP-IN POLARIZER (MILITARY POLARIZATION) LOCATED AS SHOWN.
3. 10 POSITION SIZES CONTAIN ONLY ONE SLOT FOR DUAL POLARIZATION, LOCATED AS SHOWN.
4. RECOMMENDED PRINTED CIRCUIT BOARD THICKNESS IS 1.57 [.062].
5. DISTANCE REQUIRED BY EJECTION LATCHES IN THE OPEN POSITION.
6. POSTS:
   GOLD FLASH OVER PALLADIUM-NICKEL PLATE, 0.38μm [.000015] MIN TOTAL ON THE LOCALIZED PLATE AREA,
   2.54μm [.000100] MIN TIN-LEAD PLATE ON THE SOLDER-TAIL,
   1.27μm [.000050] MIN NICKEL UNDERPLATE ON THE ENTIRE POST.
   OR
   0.38μm [.000015] MIN GOLD PLATE ON THE LOCALIZED PLATE AREA,
   2.54μm [.000100] MIN TIN-LEAD PLATE ON THE SOLDER-TAIL,
   1.27μm [.000050] MIN NICKEL UNDERPLATE ON THE ENTIRE POST.
7. MATERIAL:
   HOUSING: GLASS FILLED NYLON OR POLYESTER, 94V-0 RATED, BLACK.
   POSTS: PHOSPHOR BRONZE OR BRASS.

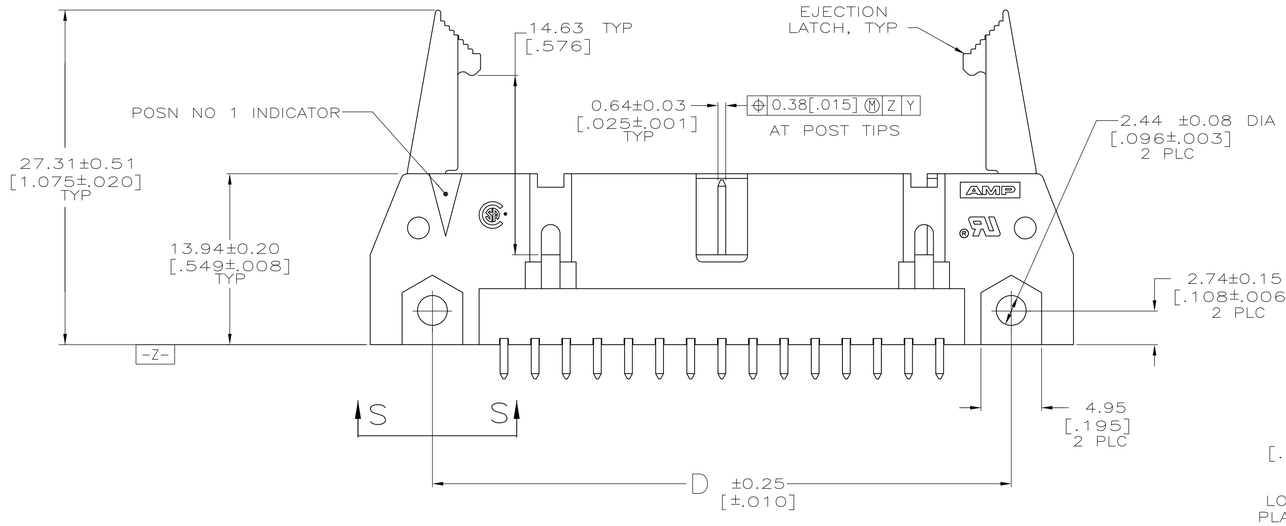

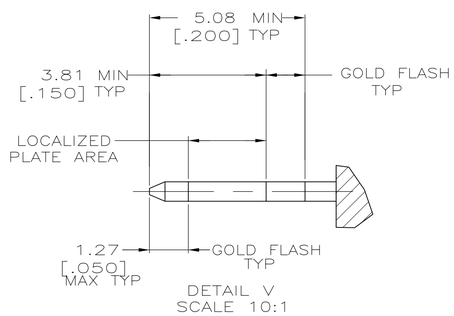

	F	E	D	C	B	A	NO OF POSN	PART NUMBER
OBSOLETE	53.34 [2.100]	71.12 [2.800]	65.02 [2.560]	75.18 [2.960]	71.12 [2.800]	60.96 [2.400]	44	1-499922-3
	78.74 [3.100]	96.52 [3.800]	90.42 [3.560]	100.58 [3.960]	96.52 [3.800]	86.36 [3.400]	64	1-499922-2
	73.66 [2.900]	91.44 [3.600]	85.34 [3.360]	95.50 [3.760]	91.44 [3.600]	81.28 [3.200]	60	1-499922-1
	60.96 [2.400]	78.74 [3.100]	72.64 [2.860]	82.80 [3.260]	78.74 [3.100]	68.58 [2.700]	50	1-499922-0
	48.26 [1.900]	66.04 [2.600]	59.94 [2.360]	70.10 [2.760]	66.04 [2.600]	55.88 [2.200]	40	499922-9
	40.64 [1.600]	58.42 [2.300]	52.32 [2.060]	62.48 [2.460]	58.42 [2.300]	48.26 [1.900]	34	499922-8
	35.56 [1.400]	53.34 [2.100]	47.24 [1.860]	57.40 [2.260]	53.34 [2.100]	43.18 [1.700]	30	499922-7
	30.48 [1.200]	48.26 [1.900]	42.16 [1.660]	52.32 [2.060]	48.26 [1.900]	38.10 [1.500]	26	499922-6
	27.94 [1.100]	45.72 [1.800]	39.62 [1.560]	49.78 [1.960]	45.72 [1.800]	35.56 [1.400]	24	499922-5
	22.86 [.900]	40.64 [1.600]	34.54 [1.360]	44.70 [1.760]	40.64 [1.600]	30.48 [1.200]	20	499922-4
	17.78 [.700]	35.56 [1.400]	29.46 [1.160]	39.62 [1.560]	35.56 [1.400]	25.40 [1.000]	16	499922-3
	15.24 [.600]	33.02 [1.300]	26.92 [1.060]	37.08 [1.460]	33.02 [1.300]	22.86 [.900]	14	499922-2
	10.16 [.400]	27.94 [1.100]	21.84 [.860]	32.00 [1.260]	27.94 [1.100]	17.78 [.700]	10	499922-1

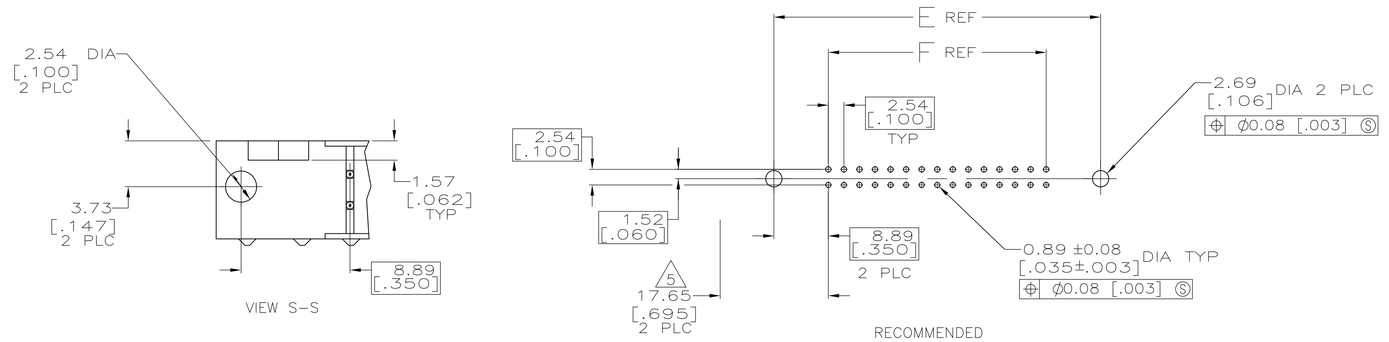

THIS DRAWING IS A CONTROLLED DOCUMENT.

DIMENSIONS: mm [INCHES]

TOLERANCES UNLESS OTHERWISE SPECIFIED:
0 PLC ± –
1 PLC ± –
2 PLC ± 0.13[.005]
3 PLC ± –
4 PLC ± –
ANGLES ± –

MATERIAL 7 FINISH 6

DWN H.MOLL 4-23-90
CHK R.STONE 11/28/90
APVD –
PRODUCT SPEC 108-40018
APPLICATION SPEC –
WEIGHT –

TE Connectivity

NAME HEADER ASSY, UNIVERSAL, AMP-LATCH

SIZE A1 | CAGE CODE 00779 | DRAWING NO C-499922 | RESTRICTED TO –

CUSTOMER DRAWING | SCALE 4:1 | SHEET 1 OF 1 | REV H1