© 2023 TE Connectivity. All Rights Reserved.

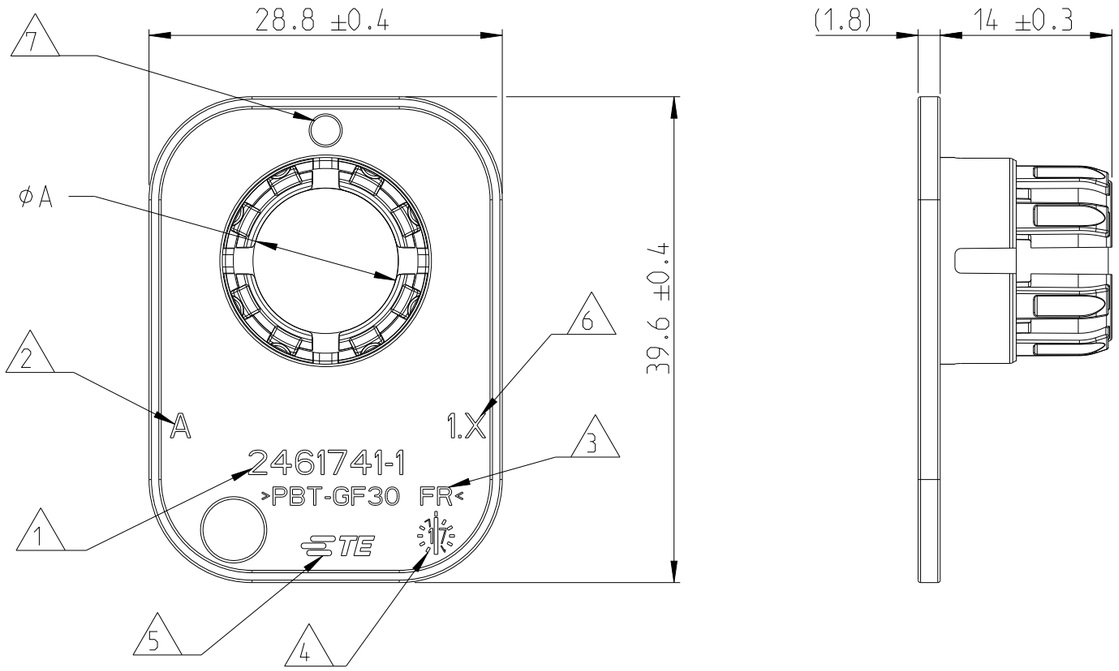

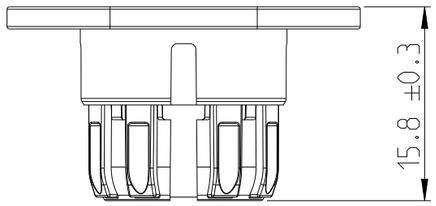

REVISIONS

P	LTR	DESCRIPTION	DATE	DWN	APVD
	A	NEW DRAWING	14DEC2023	MF	FE
	A1	ECN-25-343823: NEW VARIANTS	15AUG2025	US	PW
	A2	TABLE UPDATE	08MAY2026	GP	PW

NOTES
Bemerkungen
A2

1. TE-CONNECTIVITY ORDER-NUMBER
   TE-Connectivity Bestellnummer
2. REVISION, SEE TABLE
   Revision, siehe Tabelle
3. MATERIAL MARKING
   Materialkennzeichnung
4. PRODUCTION DATE
   Produktionsdatum
5. TE-LOGO
   TE-Logo
6. CONTACT CAVITY NUMBERING
   Kammernummerierung
7. INJECTION POINT
   Anspritzpunkt
8. MALFUNCTION CAUSED BY LACQUER IS NOT COVERED BY TE WARRANTY.
   Funktionsbeeintraechtigung durch Lackieren liegt nicht im Einfluss und Gewaehrleistungsumfang von TE.
9. BULK PACKAGING IN CORRUGATED SHIPPING BOX
   Schuettgut im Versandkarton

A2

FITS TO CABLE SIZE [mm]	A	PART NO.	REV.	DESCRIPTION	VOLUME [cm³]	WEIGHT [g]	MATERIAL	COLOUR
10.5±0.5	11.1 ±0.3	2461741-9	A	CABLE CLAMP,PCON21 35mm² Kabelklemme,PCON21 35mm²	1.76	2.90	PBT-GF30 FR	GREEN Grün
12.5±0.5	13.1 ±0.3	2461741-8	A	CABLE CLAMP,PCON21 50mm² Kabelklemme,PCON21 50mm²	1.79	2.95	PBT-GF30 FR	YELLOW Gelb
14.0±0.5	14.6 ±0.3	2461741-7	A	CABLE CLAMP,PCON21 70mm² Kabelklemme,PCON21 70mm²	1.81	2.99	PBT-GF30 FR	WHITE Weiß
16.2±0.5	16.8 ±0.3	2461741-6	A	CABLE CLAMP,PCON21 95mm² Kabelklemme,PCON21 95mm²	1.83	3.02	PBT-GF30 FR	VIOLET Violett
16.2±0.3	16.6 ±0.3	2461741-3	A	CABLE CLAMP,PCON21 95mm² Kabelklemme,PCON21 95mm²	1.84	2.99	PBT-GF30 FR	DUST GREY Staubgrau
13.7±0.25	14.05 ±0.3	2461741-2	A	CABLE CLAMP,PCON21 70mm² Kabelklemme,PCON21 70mm²	1.8	2.95	PBT-GF30 FR	LIGHT BLUE Lichtblau
11.5±0.25	11.85 ±0.3	2461741-1	A	CABLE CLAMP,PCON21 50mm² Kabelklemme,PCON21 50mm²	1.77	2.91	PBT-GF30 FR	BLACK Schwarz

PARTS LIST

THIS DRAWING IS A CONTROLLED DOCUMENT.

DIMENSIONS: mm

TOLERANCES UNLESS OTHERWISE SPECIFIED:

0 PLC	±
1 PLC	±0.5
2 PLC	±0.13
3 PLC	±0.013
4 PLC	±0.0001
ANGLES	±

MATERIAL: SEE TABLE / siehe Tabelle

FINISH: - / -

DIMENSION AND TOLERANCES ACCORDING TO:
Bemaßungen und Toleranzen gemäß:

DIN ISO 20457
DIN EN ISO 8015 (AD) - DIN EN ISO 291
DIN EN ISO 14405-1/-2/-3

DWN M. Floesser 14DEC2023
CHK P.Wrobel 14DEC2023
APVD F.Eltrop 15DEC2023
PRODUCT SPEC 108-94935
APPLICATION SPEC 114-97587
WEIGHT SEE TABLE

TE Connectivity

NAME: CABLE CLAMP,PCON21
Kabelklemme,PCON21
-

SIZE	CAGE CODE	DRAWING NO	RESTRICTED TO
A3	00779	C-2461741	-

CUSTOMER DRAWING | SCALE 2:1 | SHEET 1 OF 1 | REV A2

1470-19 (3/13)