© 2022 TE Connectivity. All Rights Reserved.

REVISIONS					
P	LTR	DESCRIPTION	DATE	DWN	APVD
	A1	ECN-23-222999	21JUL23	A.Z	C.P
	A2	ECN-23-234271	10OCT23	A.Z	C.P
	A3	REVISED PER ECN-24-274718	10JUL24	A.Z	C.P

KEY CODE CONFIGURATION VIEWS
SCALE: 2:1

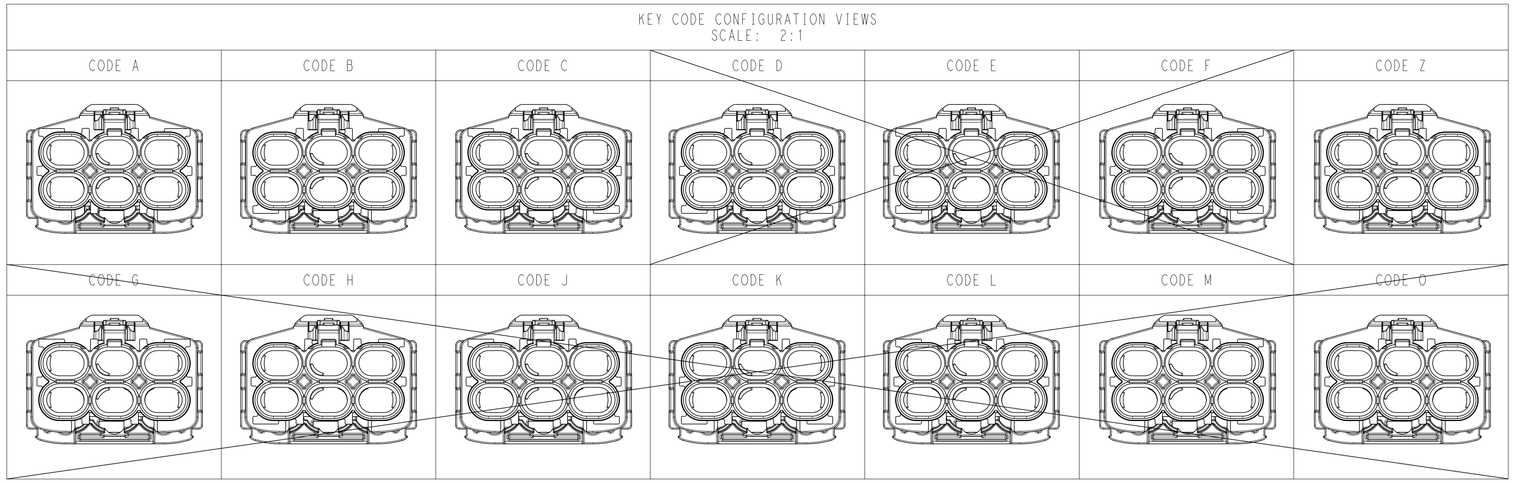

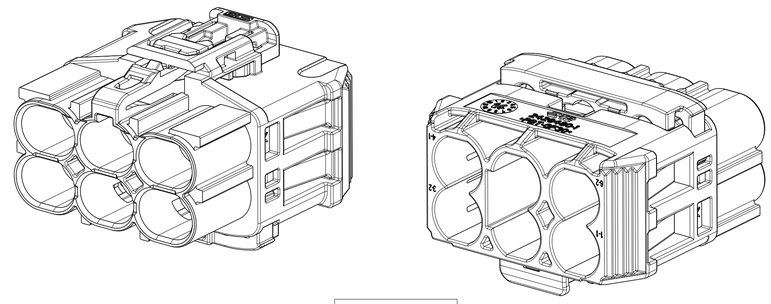

ISOMETRIC VIEWS
SCALE 3:1

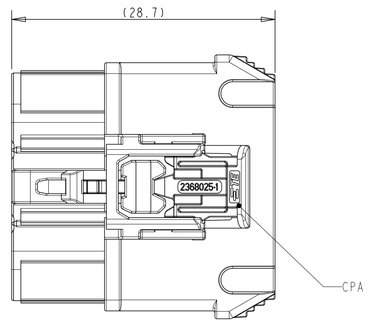

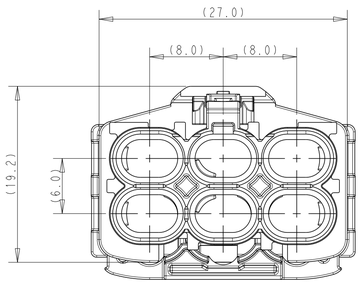

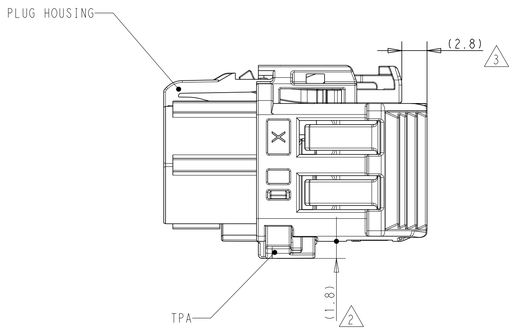

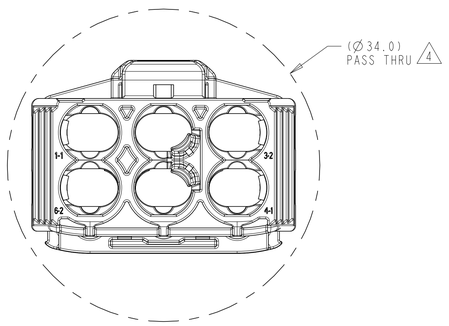

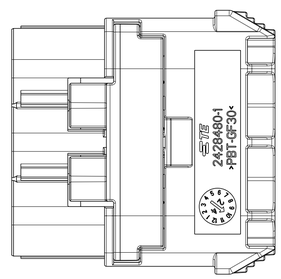

1. PLUG HOUSING - PBT, COLOR: SEE TABLE, 30% GLASS FILLED.
   TPA - PBT, TRAFFIC PURPLE, 30% GLASS FILLED.
   CPA - NYLON, COLOR: TRAFFIC RED, 30% GLASS FILLED.
2. TPA SEATED IN PRESET POSITION OF PLUG HOUSING AS INDICATED.
3. CPA SEATED IN PRESET POSITION OF PLUG HOUSING AS INDICATED.
4. INDICATED PASS THRU DIAMETER APPLIES WITH TPA CLOSED AND INCLUDES 1.0mm CLEARANCE ALL AROUND.
5. BULK PACKAGED.
6. 2428482-1 AS SHOWN.
7. IN CASE RETAINER IS UNINTENTIONALLY SET IN END POSITION BEFORE LOADING TERMINALS INTO THE HOUSING CAVITIES, RETAINER CAN BE RESET TO PRE-LOCK POSITION WITH A SUITABLE SCREWDRIVER.
8. X-2428482-X CAN REPLACE NA PART NUMBER X-2395995-X COMPLETELY.

CPA	PLUG HOUSING COLOR	KEY CODE	WEIGHT	PART NUMBER
NO	WATER BLUE	Z	(7.0g)	6-2428482-4
	TBD	O		6-2428482-3
	PASTEL ORANGE	M	(7.1g)	6-2428482-2
	YELLOW GREEN	L		6-2428482-1
	CURRY	K		6-2428482-0
	BEIGE	J		5-2428482-9
	LIGHT PINK	H		5-2428482-8
	PLATINUM GREY	G		5-2428482-7
	NUT BROWN	F		5-2428482-6
	MAY GREEN	E		5-2428482-5
	CLARET VIOLET	D		5-2428482-4
	LIGHT BLUE	C		5-2428482-3
	PURE WHITE	B		5-2428482-2
	JET BLACK	A		5-2428482-1
YES	WATER BLUE	Z	(7.3g)	1-2428482-4
	TBD	O		1-2428482-3
	PASTEL ORANGE	M	(7.4g)	1-2428482-2
	YELLOW GREEN	L		1-2428482-1
	CURRY	K		1-2428482-0
	BEIGE	J		2428482-9
	LIGHT PINK	H		2428482-8
	PLATINUM GREY	G		2428482-7
	NUT BROWN	F		2428482-6
	MAY GREEN	E		2428482-5
	CLARET VIOLET	D		2428482-4
	LIGHT BLUE	C		2428482-3
	PURE WHITE	B		2428482-2
	JET BLACK	A		2428482-1

THIS DRAWING IS A CONTROLLED DOCUMENT.

DIMENSIONS: mm

TOLERANCES UNLESS OTHERWISE SPECIFIED:
0 PLC ±
1 PLC ±
2 PLC ±
3 PLC ±
4 PLC ±
ANGLES ±

MATERIAL 1
FINISH -
-

DWN	A.ZHAO	10JUL2024
CHK	D.ZHU	10JUL2024
APVD	C.PAN	10JUL2024
PRODUCT SPEC	108-160097	
APPLICATION SPEC	114-32334	
WEIGHT	SEE TABLE	

TE Connectivity

NAME: HOUSING SUBASSEMBLY, PLUG 180 DEGREE, 6PORT, GEMnet

SIZE	CAGE CODE	DRAWING NO	RESTRICTED TO
A1	00779	C-2428482	-

CUSTOMER DRAWING | SCALE 3:1 | SHEET 1 OF 1 | REV A3

printed on 11 Jul 2024 09:56 (232323) from TE524126