THIS DRAWING IS UNPUBLISHED.
VERTRAULICHE UNVEROEFFENTLICHTE ZEICHNUNG
RELEASED FOR PUBLICATION 2016
FREI FUER VEROEFFENTLICHUNG
© COPYRIGHT 2024 TE Connectivity Germnay GmbH
ALL RIGHTS RESERVED.
ALLE RECHTE VORBEHALTEN.

MATED WITH:
PASSEND ZU: -

PROJEKT NR.: -

REVISIONS
AENDERUNGEN

P	LTR	DESCRIPTION BESCHREIBUNG	DATE	DWN	APVD
	A3	E-20-008801 - Dimension clarification	19JUN2020	RW	AK
	A4	PCN-22-133926 - Added Toolmarking (Note 6)	25MAR2022	RW	AK
	A5	PCN-23-188464 obsolete B-Samples	03JAN2024	RW	AK
	A6	ECN-25-337838 - Views added	12AUG2025	FF	AK

0-2302452-2 / 9-2302452-2

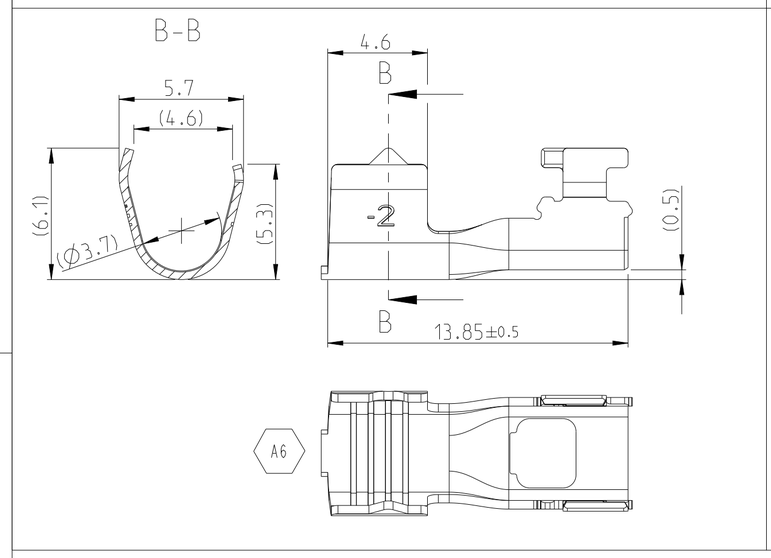

0-2302452-3 / 9-2302452-3

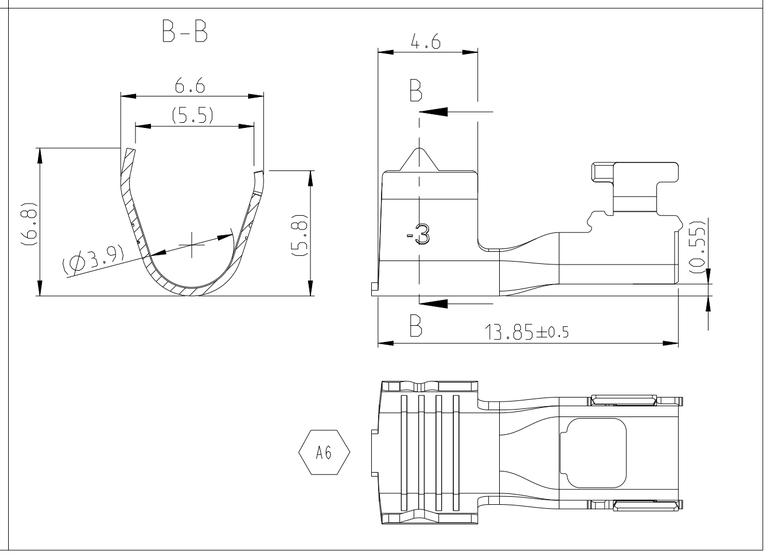

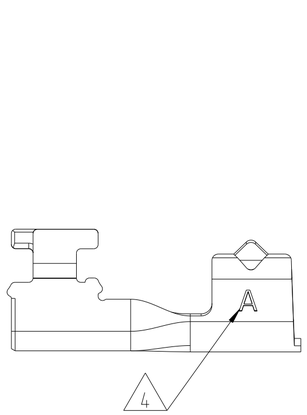

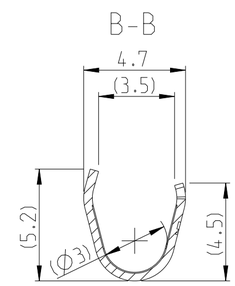

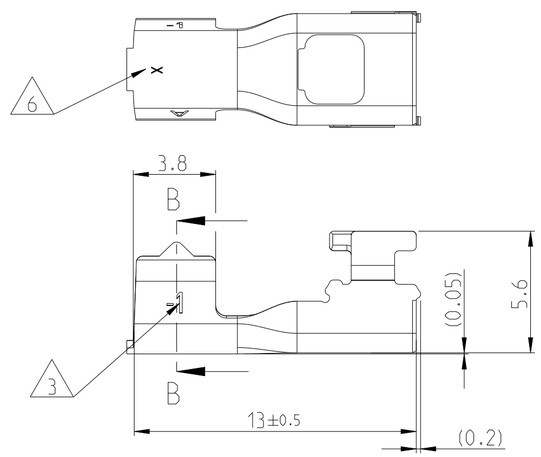

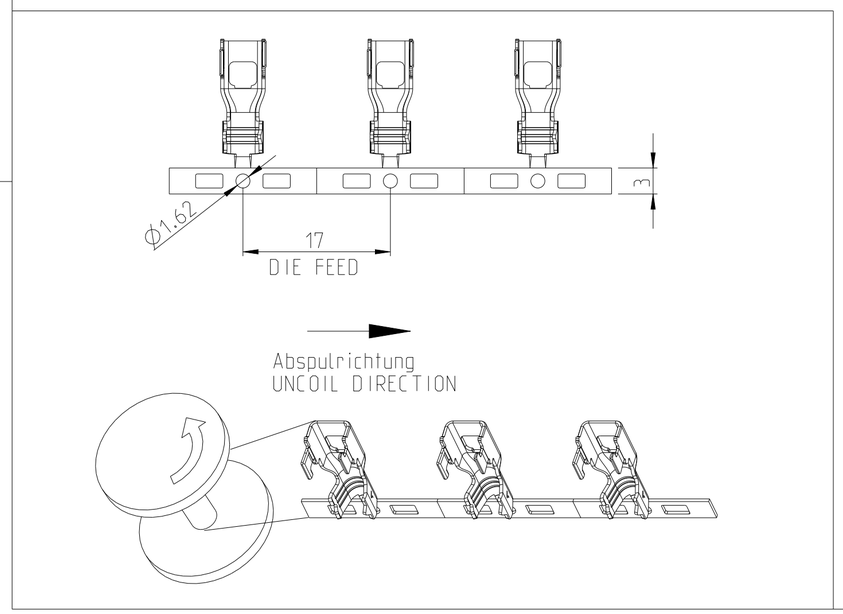

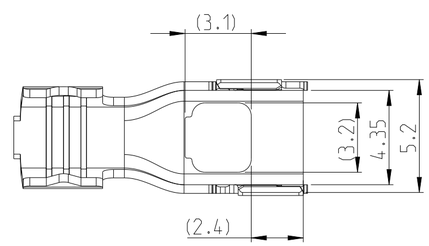

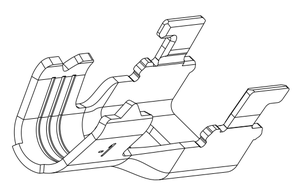

Bemerkungen / NOTES:

1 0-2302452-1 wie gezeigt
0-2302452-1 AS SHOWN

2 Abmessungen in Klammern sind nur zur Information
DIMENSIONS IN BARCKETS ARE FOR INFORMATION OLNY

3 Variantenindex.
INDEX OF VARIANT.

4 Aenderungsindex
REVISION

5 Verpackung: Am Traegerstreifen auf Spule
PACKAGING: CARRIER-STRIP ON REEL

6 Werkzeugmarkierung
TOOL MARKING
Werkzeug/TOOL 1: no marking
Werkzeug/TOOL 2: "2"

	PART NO	REV	FOR CABLE TYPE	MATERIAL	FINISH	WEIGHT LP [g]
PILOT	~~9-2302452-3~~	~~A~~	~~STP 0.13mm²~~	~~CuSn6~~	~~TIN 1.0-3.0 µm (pre-plated)~~	~~0.53~~
	~~0-2302452-2~~	~~A~~	~~UTP 0.35mm², with Ø4.0mm sheath~~			~~0.50~~
	~~9-2302452-1~~	~~A~~	~~UTP 0.13mm², with Ø3.2mm sheath~~			~~0.42~~
SERIAL	0-2302452-3	A	STP 0.13mm²	CuSn6	TIN 1.0-3.0 µm (pre-plated)	0.53
	0-2302452-2	A	UTP 0.35mm², with Ø4.0mm sheath			0.50
	0-2302452-1	A	UTP 0.13mm², with Ø3.2mm sheath			0.42

~~OBSOLETE~~

THIS DRAWING IS A CONTROLLED DOCUMENT.
DIMENSIONING AND TOLERANCING PER GPS (ISO STANDARDS).

DIMENSIONS: MASSEINHEITEN: mm

TOLERANCES UNLESS OTHERWISE SPECIFIED: ALLGEMEINTOLERANZEN
0 PLC ±0.2
1 PLC ±0.1
2 PLC ±0.1
3 PLC ±-
4 PLC ±
ANGLES/WINKEL ±2°

MATERIAL: see table -

FINISH/OBERFLAECHE/FARBE: see table -

DIN 9242 - TOLERANCES AND ACCEPTANCE CONDITIONS
DIN 9242 - Toleranzen und Abnahmebedingungen

DWN J. Kießwetter 21OCT2016
CHK R. Wuerker 01NOV2016
APVD A. Ketteler 03NOV2016
PRODUCT SPEC PRODUKTSPEZ. 108-94568
APPLICATION SPEC VERARBEITUNGSSPEZ. 114-94431
WEIGHT GEWICHT see table

TE Connectivity

NAME
Fixierelement f. MATEnet Inserts
FIXATION ELEMENT f. MATEnet INSERTS
-

SIZE	CAGE CODE	DRAWING NO ZEICHNUNGS-NR.	RESTRICTED TO NUR FUER
A2	00779	C-2302452	-

CUSTOMER DRAWING /KUNDENZEICHNUNG
SCALE MASSSTAB 5:1 SHEET BLATT 1 OF VON 1 REV A6