NOTES:

UNLESS OTHERWISE SPECIFIED

1. INTERPRET DRAWING PER ASME Y14.5M-1994
2. VARIATION IN PLATING COLOR IS NORMAL AND ALLOWED.
3. MAXIMUM PIN LEAN OF 3° IN ANY DIRECTION.
4. 0,2mm MAXIMUM BURR ALLOWED.
5. RoHS COMLIANT AND CERTIFIED.

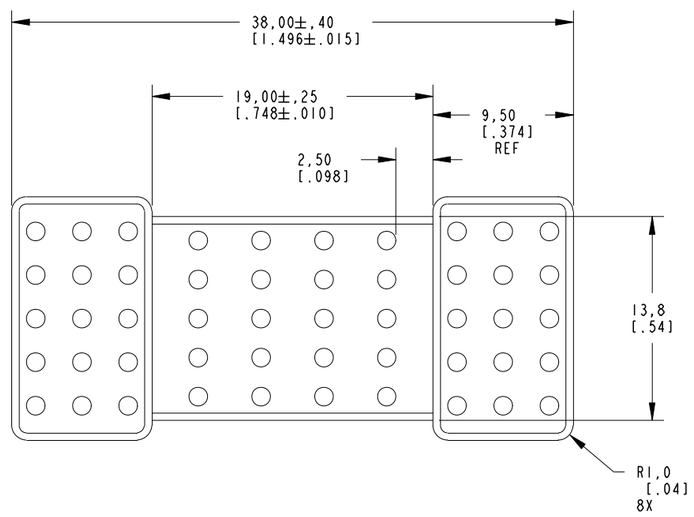

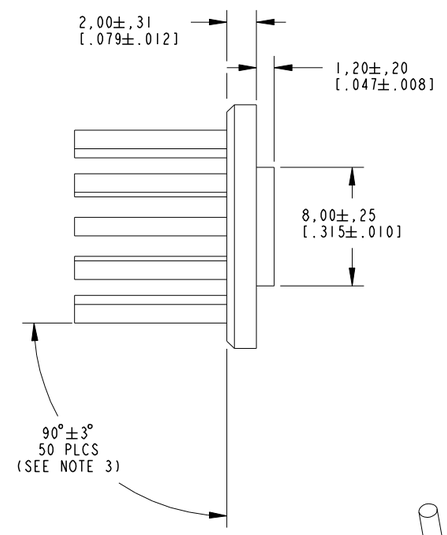

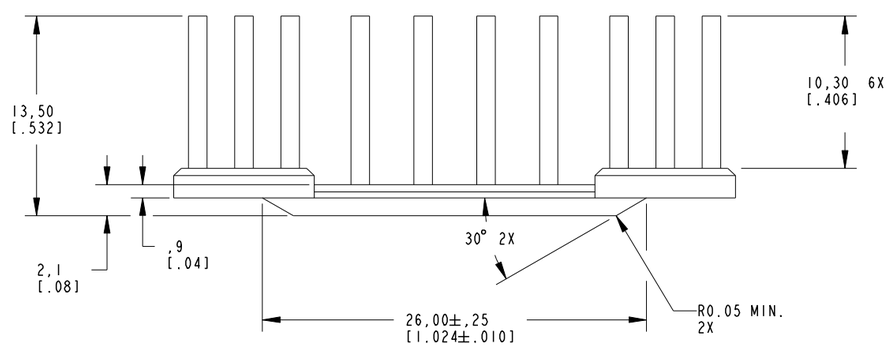

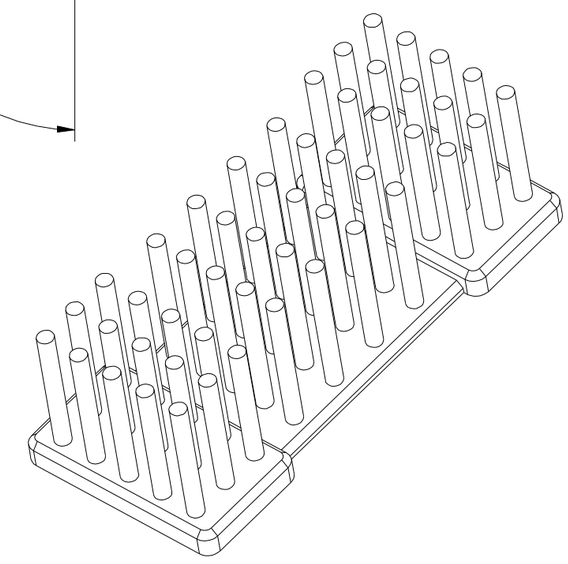

CUSTOMER DRAWING

SPECIFICATIONS ARE SUBJECT TO CHANGE WITHOUT NOTICE

REVISION INFO	REV.
RELEASE OS60-0321-04 DA 12-22-04 APP'D: BP 12-22-04	0
REVISED OS60-0103-05 ETAO 6-7-05 APP'D: B.P 6-16-05	A
RELEASED ECO-08-007831 ETAO 3-30-08 APP'D: B.P 4-2-08	A1

DO NOT SCALE

Tyco Electronics — Norwood, Massachusetts 02062

UNLESS OTHERWISE SPECIFIED TOLERANCES ARE:	DRAWN BY: D.AMARAL	DATE: 12-22-04	MATERIAL: 6063-T5 CAST ALUMINUM
X,X ± ,5 X,XX ± ,25 X,XXX ± ANGLES ± °	ENGINEER: B. PETROCELLI	DATE: 12-22-04	FINISH: IMERSION NICKEL PLATED
	FILENAME / PROJECT	SYSTEM: PRO-E	

CONFIDENTIAL PROPERTY OF TYCO ELECTRONICS. NOT TO BE DISCLOSED TO OTHERS, REPRODUCED OR USED FOR ANY PURPOSES EXCEPT AS AUTHORIZED IN WRITING BY AN AUTHORIZED OFFICIAL OF TYCO ELECTRONICS. MUST BE RETURNED TO TYCO ELECTRONICS ON DEMAND, ON COMPLETION OF ORDERS OR OTHER PURPOSES FOR WHICH LENT.

TITLE: HETSINK SFP 13,5MM TALL

DIMENSIONS ARE IN: MILLIMETERS	SCALE: 4:1	TE PART NO.: 1542993-2	SHEET 1 of 1
THIRD ANGLE PROJECTION	SIZE C	DWG. NO.: C-1542993	REV. A1