© – TE Connectivity. All Rights Reserved.

| REVISIONS | | | | | |
|---|---|---|---|---|---|
| P | LTR | DESCRIPTION | DATE | DWN | APVD |
| | J2 | ECR–25–239014 | 21APR2025 | ABS | PS |

△1 .00076[.000030] GOLD IN THE CONTACT AREA, .00254[.000100]–.00508[.000200] MATTE TIN–LEAD ON THE SOLDER TAIL, ALL OVER .00127[.000050] NICKEL

△2 POINT OF MEASUREMENT FOR PLATING THICKNESS

△3 THE NOTED DIMENSIONS APPLY FROM THE BASIC DIMENSION LINE (NOT THE POST CENTERLINE) TO THE SURFACE INDICATED

△4 ON ASSEMBLIES WITH FOUR OR MORE POSITIONS, TWO POLARIZATION SLOTS. ON ASSEMBLIES WITH TWO OR THREE POSITIONS, ONE POLARIZATION SLOT.

△5 DIMENSIONS NOTED ARE FOR SOLDER STENCIL LAYOUT FOR USE WITH A 1.57±0.20 [.062±.008] THICK PRINTED CIRCUIT BOARD

△6 MATERIAL: HOUSING – HIGH TEMPERATURE LCP
COLOR: BLACK
POSTS – BRASS

△7 .00076[.000030] GOLD IN THE CONTACT AREA, .00254[.000100]–.00508[.000200] MATTE TIN ON THE SOLDER TAIL, ALL OVER .00127[.000050] NICKEL

△8 OBSOLETE PARTS: OBSOLETE CIS STREAMLINING PER D.RENAUD/D.SINISI

△9 0.25 [.010] RECESS PERMISSIBLE IN THIS AREA FOR MOLD SHUT OFF

△10 OBSOLETE

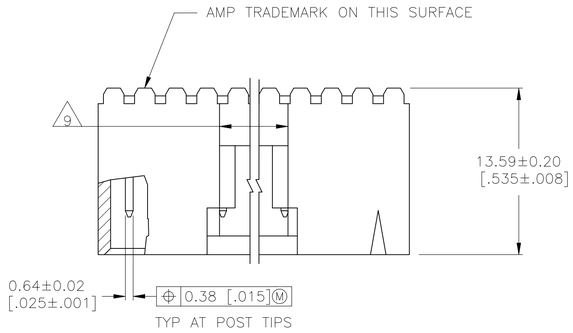


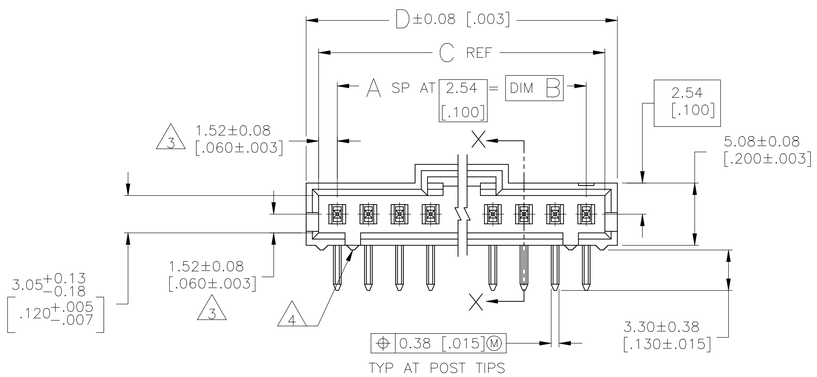


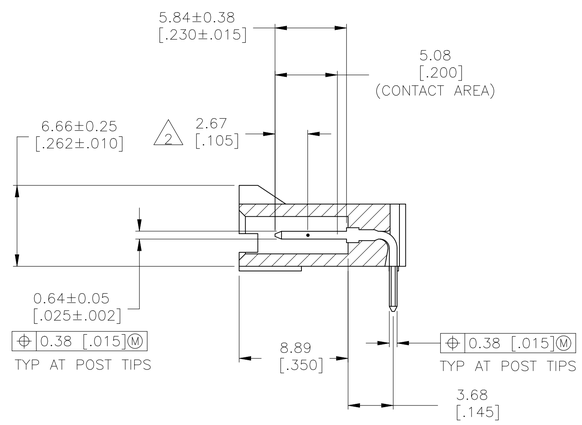


SECTION X–X

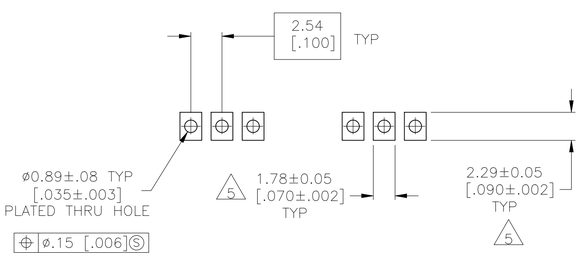


RECOMMENDED PC BOARD MOUNTING DIMENSIONS
RECOMMENDED STENCIL THICKNESS = 0.25 [.010]

| | PLATING | D | C | B | A | NO OF POSN | PART NUMBER |
|---|---|---|---|---|---|---|---|
| | △7 | 2.595 | 2.520 | 2.400 | 24 | 25 | △10 7–104935–4 |
| | △7 | 2.495 | 2.420 | 2.300 | 23 | 24 | 7–104935–3 |
| | △7 | 2.395 | 2.320 | 2.200 | 22 | 23 | △10 7–104935–2 |
| | △7 | 2.295 | 2.220 | 2.100 | 21 | 22 | △10 7–104935–1 |
| | △7 | 2.195 | 2.120 | 2.000 | 20 | 21 | △10 7–104935–0 |
| | △7 | 2.095 | 2.020 | 1.900 | 19 | 20 | 6–104935–9 |
| | △7 | 1.995 | 1.920 | 1.800 | 18 | 19 | △10 6–104935–8 |
| | △7 | 1.895 | 1.820 | 1.700 | 17 | 18 | △10 6–104935–7 |
| | △7 | 1.795 | 1.720 | 1.600 | 16 | 17 | △10 6–104935–6 |
| | △7 | 1.695 | 1.620 | 1.500 | 15 | 16 | △10 6–104935–5 |
| | △7 | 1.595 | 1.520 | 1.400 | 14 | 15 | △10 6–104935–4 |
| | △7 | 1.495 | 1.420 | 1.300 | 13 | 14 | 6–104935–3 |
| | △7 | 1.395 | 1.320 | 1.200 | 12 | 13 | △10 6–104935–2 |
| | △7 | 1.195 | 1.120 | 1.000 | 10 | 11 | 6–104935–1 |
| | △7 | 1.095 | 1.020 | .900 | 9 | 10 | 6–104935–0 |
| | △7 | .995 | .920 | .800 | 8 | 9 | 5–104935–9 |
| | △7 | .795 | .720 | .600 | 6 | 7 | 5–104935–8 |
| | △7 | .695 | .620 | .500 | 5 | 6 | 5–104935–7 |
| | △7 | .595 | .520 | .400 | 4 | 5 | 5–104935–6 |
| | △7 | 7.49 [.295] | 5.59 [.220] | 2.54 [.100] | 1 | 2 | 5–104935–5 |
| | △7 | 32.89 [1.295] | 30.99 [1.220] | 27.94 [1.100] | 11 | 12 | 5–104935–4 |
| | △7 | 10.03 [.395] | 8.13 [.320] | 5.08 [.200] | 2 | 3 | 5–104935–3 |
| | △7 | 22.73 [.895] | 20.83 [.820] | 17.78 [.700] | 7 | 8 | 5–104935–2 |
| | △7 | 12.57 [.495] | 10.67 [.420] | 7.62 [.300] | 3 | 4 | 5–104935–1 |
| SUPERSEDED BY 5–104935–5 | △1 | 7.49 [.295] | 5.59 [.220] | 2.54 [.100] | 1 | 2 | 104935–5 |
| SUPERSEDED BY 5–104935–4 | △1 | 32.89 [1.295] | 30.99 [1.220] | 27.94 [1.100] | 11 | 12 | 104935–4 |
| SUPERSEDED BY 5–104935–3 | △1 | 10.03 [.395] | 8.13 [.320] | 5.08 [.200] | 2 | 3 | 104935–3 |
| SUPERSEDED BY 5–104935–2 | △1 | 22.73 [.895] | 20.83 [.820] | 17.78 [.700] | 7 | 8 | 104935–2 |
| △8 SUPERSEDED BY 5–104935–1 | △1 | 12.57 [.495] | 10.67 [.420] | 7.62 [.300] | 3 | 4 | ~~104935–1~~ |

THIS DRAWING IS A CONTROLLED DOCUMENT.

DIMENSIONS: mm [INCHES]

TOLERANCES UNLESS OTHERWISE SPECIFIED:
0 PLC ± –
1 PLC ± –
2 PLC ± –
3 PLC ± .005
4 PLC ± –
ANGLES ± –

MATERIAL △6

FINISH
POST : SEE TABLE

DWN 27–JUL–95 E. BRANDBERG
CHK 27–JUL–95 J. GESFORD
APVD 27–JUL–95 D. DUPLER
PRODUCT SPEC —
APPLICATION SPEC —
WEIGHT —

TE Connectivity

NAME
HEADER ASSY, AMPMODU MTE, RIGHT ANGLE, SINGLE ROW, .100CL, .025 SQ POSTS, WITH LATCH

| SIZE | CAGE CODE | DRAWING NO | RESTRICTED TO |
|---|---|---|---|
| A1 | 00779 | C–104935 | — |

CUSTOMER DRAWING | SCALE 4:1 | SHEET 1 OF 1 | REV J2

4805 (1/15)