THIS DRAWING IS UNPUBLISHED. RELEASED FOR PUBLICATION -,- .
© COPYRIGHT - By - ALL RIGHTS RESERVED.

LOC	DIST
AF	50

REVISIONS

P	LTR	DESCRIPTION	DATE	DWN	APVD
	AF5	REVISED PER ECO 11-018422	09SEP11	JR	PD

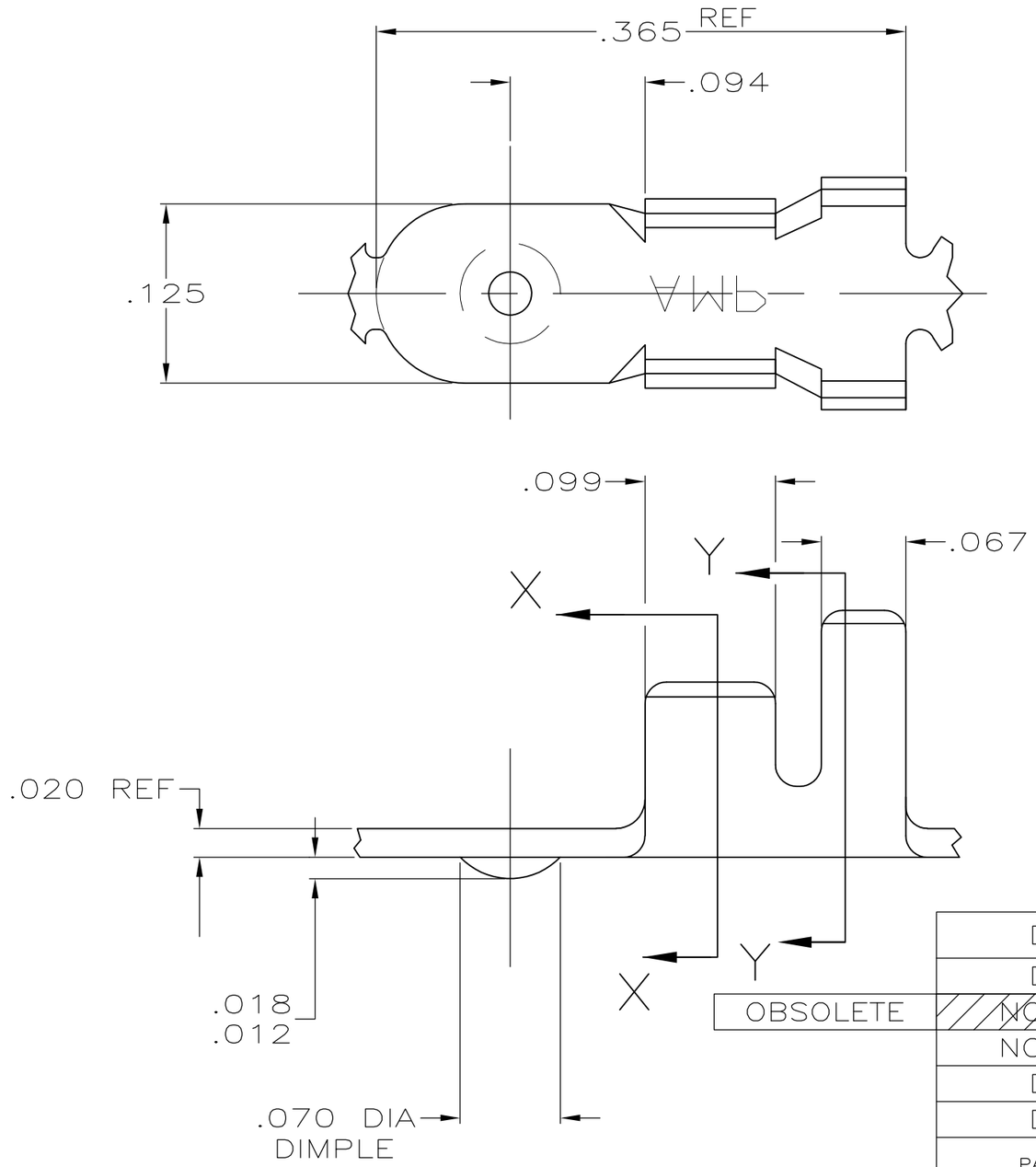

1 CONTINUOUS STRIP ON REELS.

2 WIRE SIZE IS #20-#16 AWG.

3 INSULATION RANGE IS .090-.130 DIA.

4 .000080 MIN TIN PLATE.

5 COPPER FLASH BASE WITH .000005 MIN GOLD PLATE OVER .000030 MIN NICKEL UNDERPLATE.

6 .000100 MIN NICKEL PLATE

7 PRELIMINARY - NOT FOR PRODUCTION

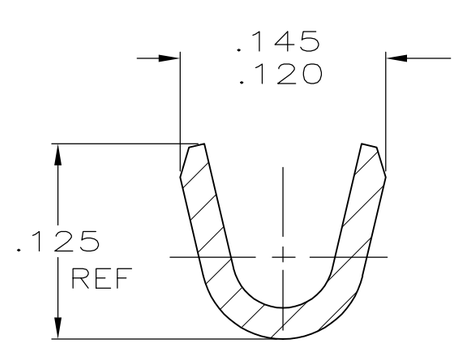

SECTION X-X

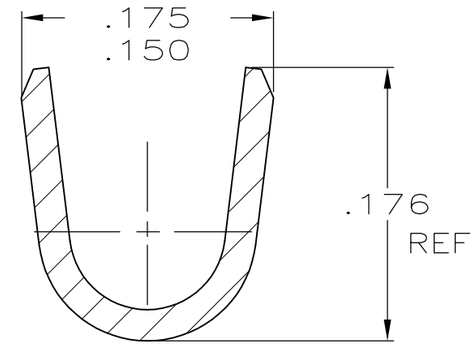

SECTION Y-Y

	PART NUMBER	FINISH	MATERIAL	PART NUMBER
	DIMPLE	-	T4 PHOS BRONZE	7 40990-5
	DIMPLE	- 6	TEMPER 3 STEEL	40990-4
OBSOLETE	~~NO DIMPLE~~	~~-~~	~~TEMPER 3 STEEL~~	~~40990-3~~
	NO DIMPLE	5 -	TEMPER 3 STEEL	40990-2
	DIMPLE	- 4	TEMPER 3 STEEL	40990-1
	DIMPLE	-	ANNEALED UNS S43000 STAINLESS STEEL	40990

THIS DRAWING IS A CONTROLLED DOCUMENT.

DIMENSIONS: INCHES

TOLERANCES UNLESS OTHERWISE SPECIFIED:

0 PLC	± -
1 PLC	± -
2 PLC	± -
3 PLC	± .015
4 PLC	± -
ANGLES	± -

MATERIAL: SEE TABLE

FINISH: SEE TABLE

DWN MICHAEL S. FEHER 26JUL2001
CHK GARY PORTA 26JUL2001
APVD GARY PORTA 26JUL2001
PRODUCT SPEC —
APPLICATION SPEC —
WEIGHT —

TE Connectivity

NAME — WELD TAB —

SIZE	CAGE CODE	DRAWING NO	RESTRICTED TO
A3	00779	C-40990	—

CUSTOMER DRAWING | SCALE 10:1 | SHEET 1 OF 1 | REV AF5