THIS DRAWING IS UNPUBLISHED. RELEASED FOR PUBLICATION 20
© COPYRIGHT 20 BY - ALL RIGHTS RESERVED.

REVISIONS

P	LTR	DESCRIPTION	DATE	DWN	APVD
	A1	REVISED PER ECO-11-005033	02APR2011	RK	HMR
	A2	REDRAW IN TO CREO	14APR2017	GH	JP

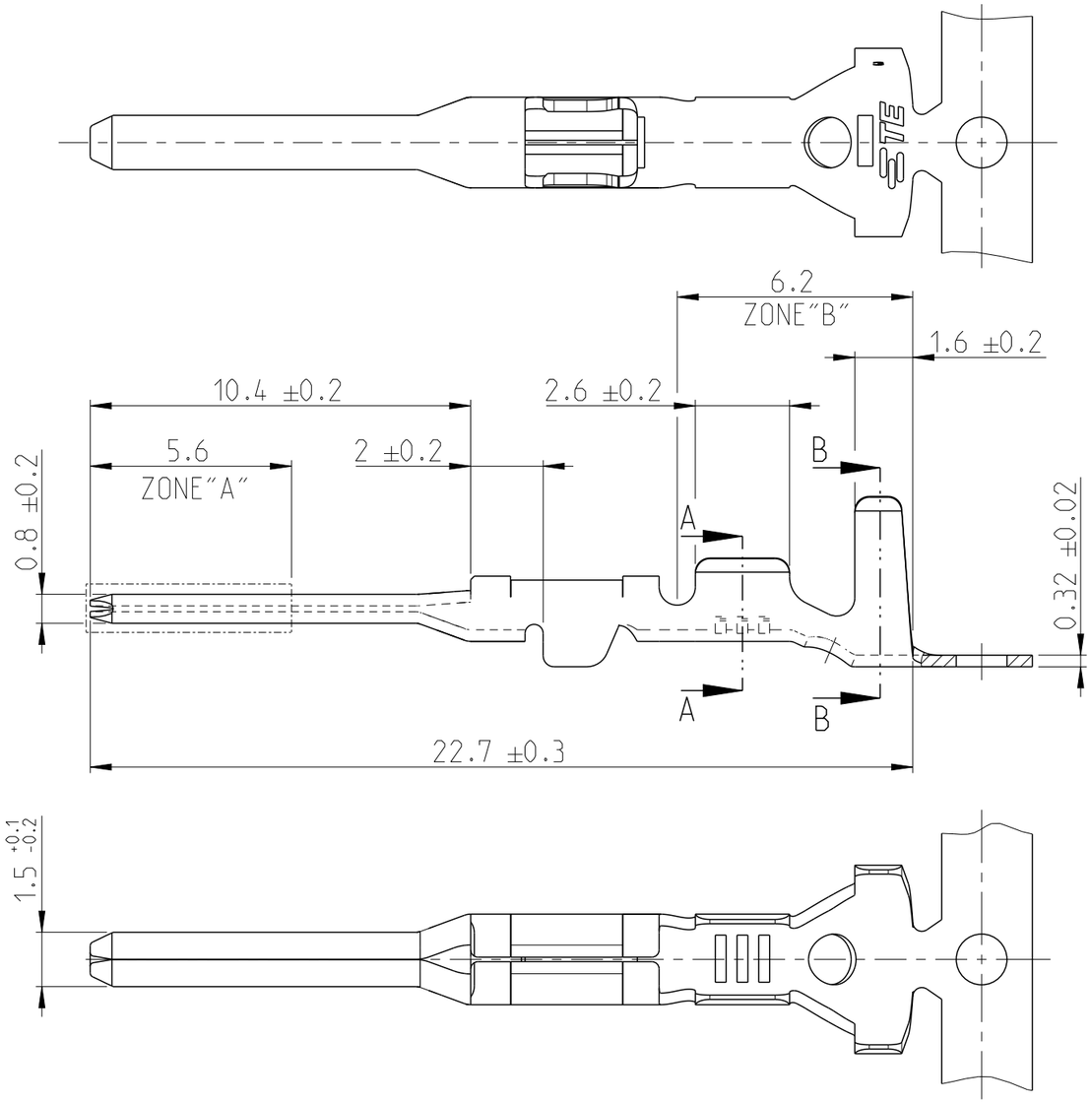

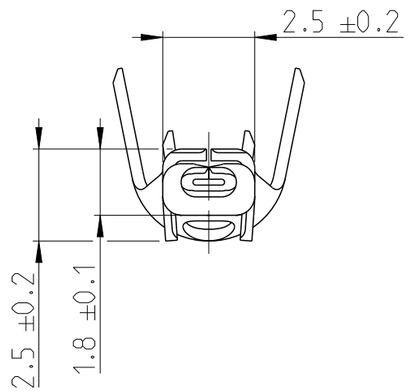

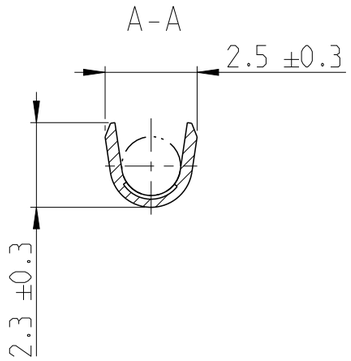

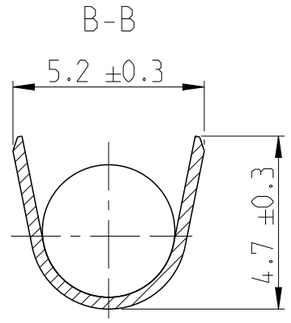

GOLD PLTD (DORATO) 1	BRASS (OTTONE)	282404-3	A
PRE-TIN (PRE STAGNATO)	BRASS (OTTONE)	282404-1	A
FINISH/COLOUR (FINITURA/COLORE	MATERIAL (MATERIALE)	TE PART NO. (NUMERO)	REV

1 GOLD PLATED 0.8 µm OVER "ZONE A". TIN PLATED OVER "ZONE B" AND NICKEL UNDERPLATING ALL OVER.
DORATURA 0.8 µm NELLA "ZONA A". STAGNATURA NELLA "ZONA B" E NICHELATURA SU TUTTO IL CONTATTO.

2 SUITABLE FOR SINGLE WIRE SEAL TE P/N 281934-4
ADATTO PER GOMMINO PASSACAVO TE P/N 281934-4

A2 3 ITEM IS SUPPLIED REELED ON CARTON REEL
WITH STRIP PITCH = 11.9±0.1mm
STATO DI FORNITURA: AVVOLTI SU BOBINA CON PASSO
TRA TERMINALI DI = 11.9±0.1mm

INS. DIA. RANGE (DIAM. ISOLANTE) 2	WIRE RANGE (RANGO FILO)
	Ø0.35 -0.5mm²

DIRECTION OFF TOP OF REEL
SENSO DI USCITA DALLA BOBINA

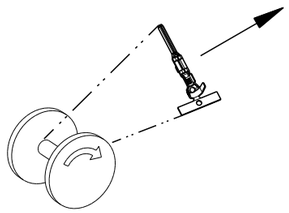

THIS DRAWING IS A CONTROLLED DOCUMENT.

DIMENSIONS: mm

TOLERANCES UNLESS OTHERWISE SPECIFIED:
0 PLC ±-
1 PLC ±-
2 PLC ±-
3 PLC ±-
4 PLC ±-
±0.3
ANGLES ±2°

MATERIAL - -
FINISH - -

DWN C.BERTINI JUN1992
CHK A.BRUNI JUN1992
APVD -
PRODUCT SPEC 108-20090
APPLICATION SPEC 114-20045
WEIGHT -

TE Connectivity

NAME MINI MIC SRS TAB CONTACT
-
-

SIZE	CAGE CODE	DRAWING NO	RESTRICTED TO
A3	00779	C-282404	-

CUSTOMER DRAWING | SCALE 5:1 | SHEET 1 OF 1 | REV A2

1470-19 (3/13)