REVISIONS			
REV	DESCRIPTION	DATE	APPV
A	PRODUCTION RELEASE	JHAGER 3/29/21	

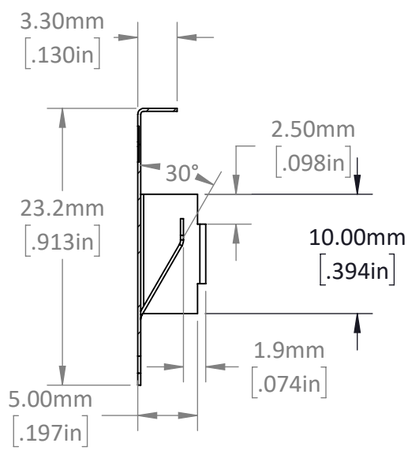

SECTION A-A

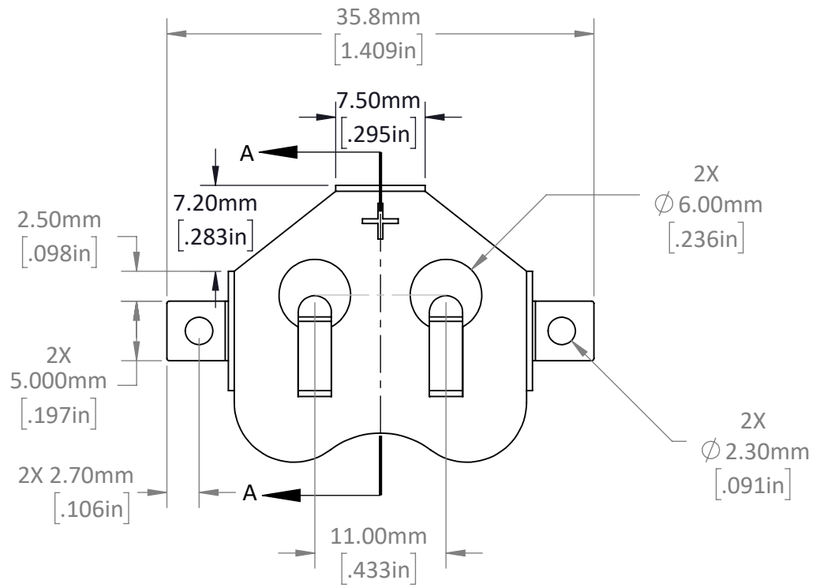

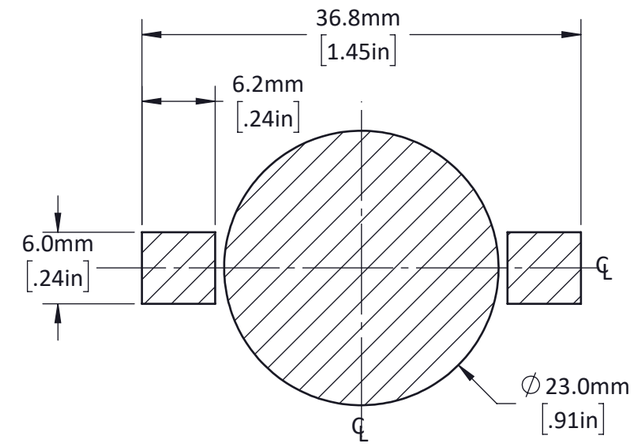

PCB LAND PATTERN

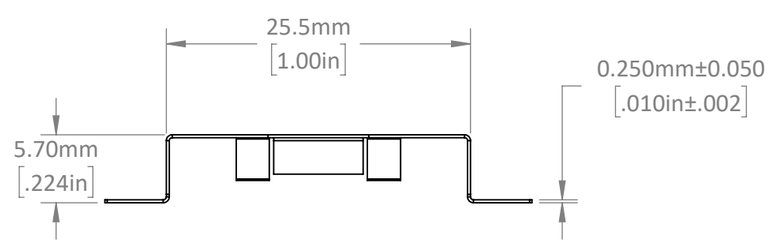

NOTES: (UNLESS OTHERWISE SPECIFIED)

1. ALL DIMENSIONS ARE IN MILLIMETERS [IN].
2. DIMENSIONS APPLY AFTER FINISHING.
3. MANUFACTURE TO BE COMPLIANT WITH EU RoHS DIRECTIVE,USE MATERIALS THAT DO NOT CONTAIN REACH SUBSTANCES OF VERY HIGH CONCERN >1000ppm, AND USE DRC CONFLICT-FREE SOURCED MATERIALS.
4. ALL UNLISTED GEOMETRY CONTROLLED BY MODEL AT LATEST REVISION.
5. MATERIAL: .250mm C5191 PHOSPHOR BRONZE 3µIN NICKEL PLATING.
6. BEND RADIUS: MINIMUM FOR LISTED MATERIAL AT TEMPER LEVEL SHOWN. ALL BENDS 90°±3º UNLESS OTHERWISE SPECIFIED.
7. INTENDED TO ACCOMODATE CR2450 FORM FACTOR Ø24.5mm COIN POWER CELL.

WARNING: THIS DRAWING CONTAINS PROPRIETARY INFORMATION THAT IS THE SOLE PROPERTY OF LINX TECHNOLOGIES, AND SHALL BE TREATED AS SUCH. NO DISCLOSURE OR REPRODUCTION OF THIS DOCUMENT IS PERMITTED, IN WHOLE OR IN PART, WITHOUT THE EXPRESS WRITTEN PERMISSION OF LINX TECHNOLOGIES OR ITS DESIGNATED AGENTS.

TE connectivity
159 ORT LANE
MERLIN, OR 97532

TITLE:
Battery Retainer Coin,
24.5 mm 1 Cell SMT (SMD), 2450

MATERIAL:
PHOSPHOR BRONZE
C5191

WEIGHT:

FINISH:
NICKEL

INTERPRET DIMENSIONS AND TOLERANCES PER ASME Y14.5.

.X ±2.0
.XX ±1.0
.XXX ±.500

ANGLES: ±1°
SURFACE: 32

PROJECTION:

DRAWN: JHAGER DT: 3/29/21
ENGR: DASARATHAN DT: 10-JUL-08

SIZE: B
DWG. NO.: C-BAT-HLD-006-SMT
REV: A
SCALE: 2:1
DO NOT SCALE DRAWING
SHEET 1 OF 2

LDCFDFB_B

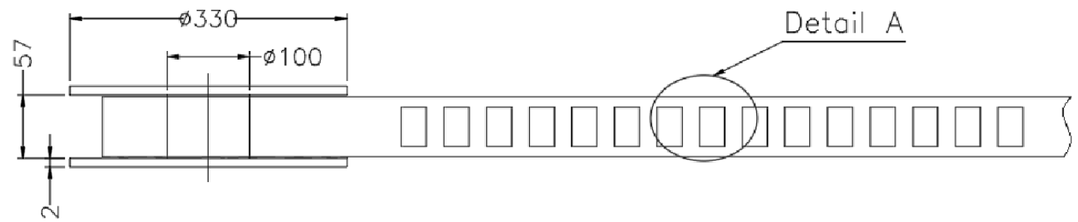

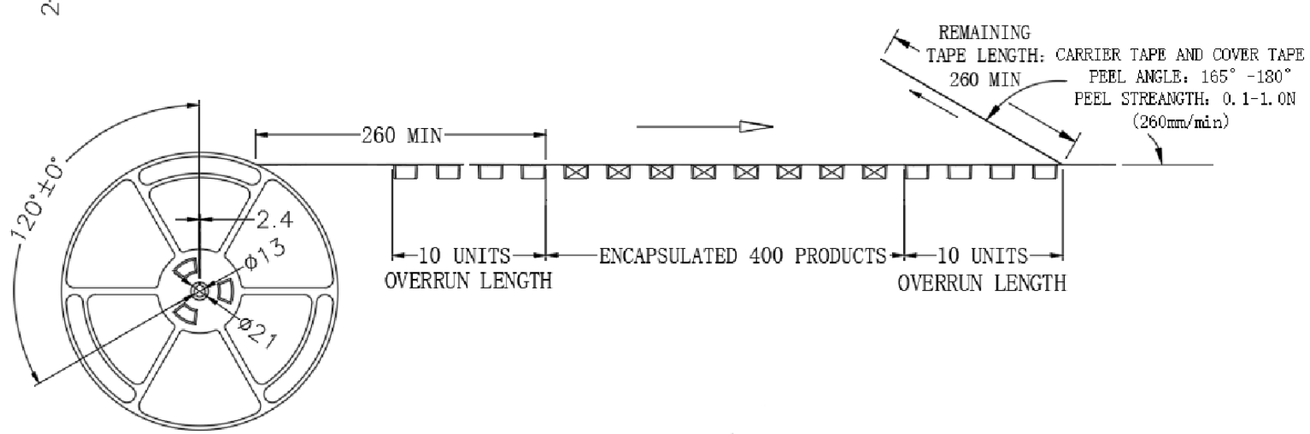

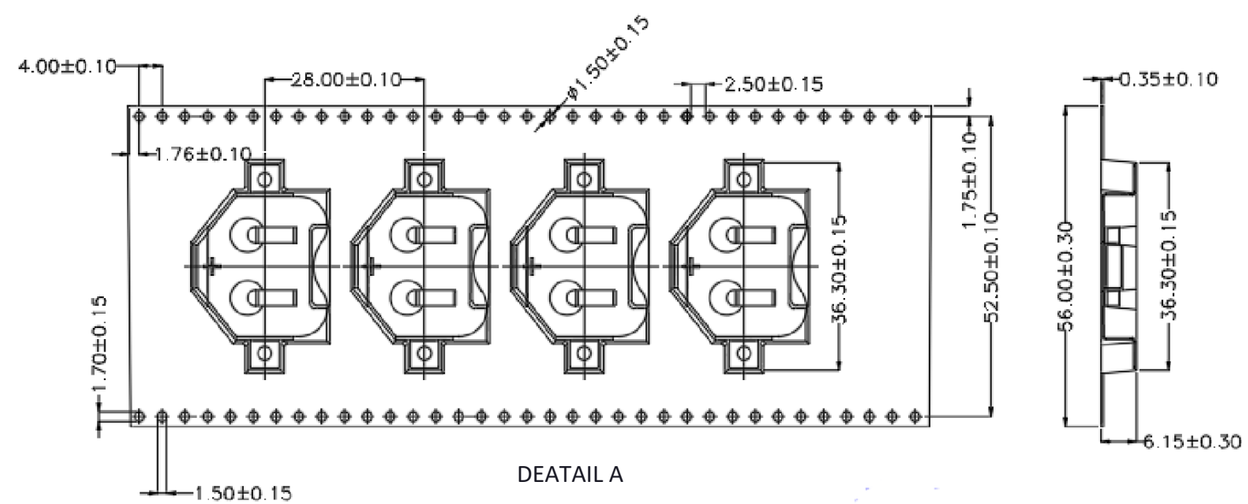

DEATAIL A

NOTES:

1. The cumulative allowable tolerance of the distance between ten holes of the round hole is ±0.2mm
2. The length of the belt is 250mm and the allowable bending degree is 1mm
3. The thickness of the material is measured at the edge of the carrier tape
4. All size definitions follow the definitions of EIA-481-C series standards
5. Material: black PS T=0.35mm
6. All reels are gray and blue hollowed out rotating plastic reels
7. The non-specified tolerance range is: ±0.1mm; the cumulative error is not calculated if it exceeds 250mm
8. The chamfer R where the shape of the cavity is not marked is 0.2-0.3; if the draft angle is not marked, it is below 3°

Linx
159 ORT LANE
MERLIN, OR 97532

SIZE	DWG. NO.	REV
B	BAT-HLD-006-SMT-TR	A
SCALE: 2:1	DO NOT SCALE DRAWING	SHEET 2 OF 2

LDCFDFB_B