Jan.1.2026 Copyright 2026 HIROSE ELECTRIC CO., LTD. All Rights Reserved.
In case of consideration for using Automotive equipment / device which demand high reliability, kindly contact our sales window correspondents.

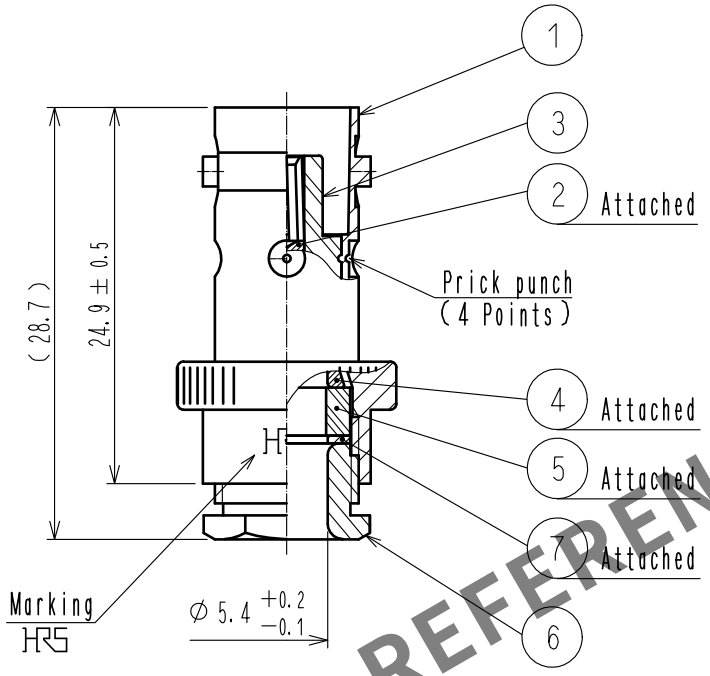

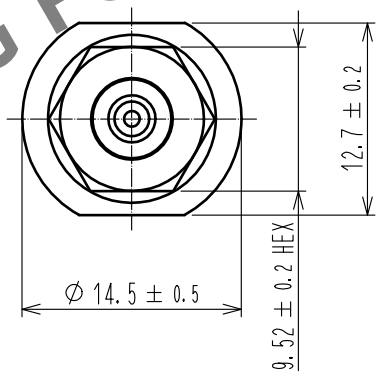

HRS DRAWING FOR REFERENCE

NO.	MATERIAL	FINISH . REMARKS	NO.	MATERIAL	FINISH . REMARKS
4	BRASS	NICKEL PLATING			
3	PTFE		7	BRASS	NICKEL PLATING
2	BERYLLIUM COPPER	GOLD PLATING	6	BRASS	NICKEL PLATING
1	BRASS	NICKEL PLATING	5	SILICONE RUBBER	

UNITS mm	SCALE 2 : 1	COUNT	DESCRIPTION OF REVISIONS	DESIGNED	CHECKED	DATE
		0				

HIROSE ELECTRIC CO., LTD.

APPROVED	: NK. NINOMIYA	20211012	DRAWING NO.	EDC-000866-41-00
CHECKED	: NK. NINOMIYA	20211012	PART NO.	UG-89/U(41)
DESIGNED	: MT. KANEKO	20211012	CODE NO.	CL0302-0034-0-41
DRAWN	: NK. OOSHIMA	20211012		0 1/1

FORM HC0011-5-51