Feb.1.2026 Copyright 2026 HIROSE ELECTRIC CO., LTD. All Rights Reserved.
In case of consideration for using Automotive equipment / device which demand high reliability, kindly contact our sales window correspondents.

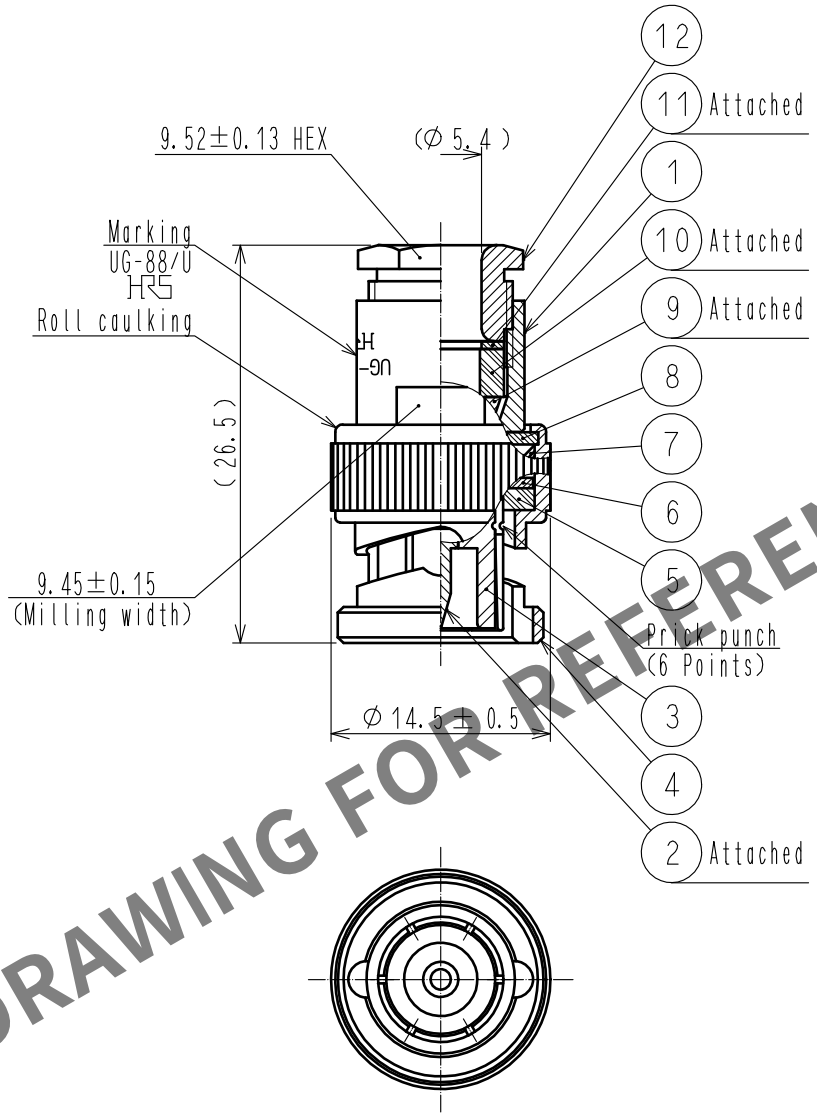

HRS DRAWING FOR REFERENCE

NO.	MATERIAL	FINISH , REMARKS	NO.	MATERIAL	FINISH , REMARKS
6	BRASS	NICKEL PLATING	12	BRASS	NICKEL PLATING
5	SILICON RUBBER		11	BRASS	NICKEL PLATING
4	BRASS	NICKEL PLATING	10	SILICONE RUBBER	
3	PTFE		9	BRASS	NICKEL PLATING
2	BRASS	GOLD PLATING	8	BRASS	NICKEL PLATING
1	BRASS	NICKEL PLATING	7	BERYLLIUM COPPER	SILVER PLATING

UNITS mm	SCALE 2 : 1	COUNT	DESCRIPTION OF REVISIONS	DESIGNED	CHECKED	DATE
		0				

HIROSE ELECTRIC CO., LTD.

APPROVED	: NK. NINOMIYA	20210521	DRAWING NO.	EDC-000311-41-00
CHECKED	: NK. NINOMIYA	20210521	PART NO.	UG-88/U(41)
DESIGNED	: NK. OOSAWA	20210521	CODE NO.	CL0302-0001-0-41
DRAWN	: NK. OOSAWA	20210521		0 1/1

FORM HC0011-5-51