Feb.1.2026 Copyright 2026 HIROSE ELECTRIC CO., LTD. All Rights Reserved.
In case of consideration for using Automotive equipment / device which demand high reliability, kindly contact our sales window correspondents.

	COUNT	DESCRIPTION OF REVISIONS	BY	CHKD	DATE		COUNT	DESCRIPTION OF REVISIONS	BY	CHKD	DATE
△						△					
△						△					
△						△					

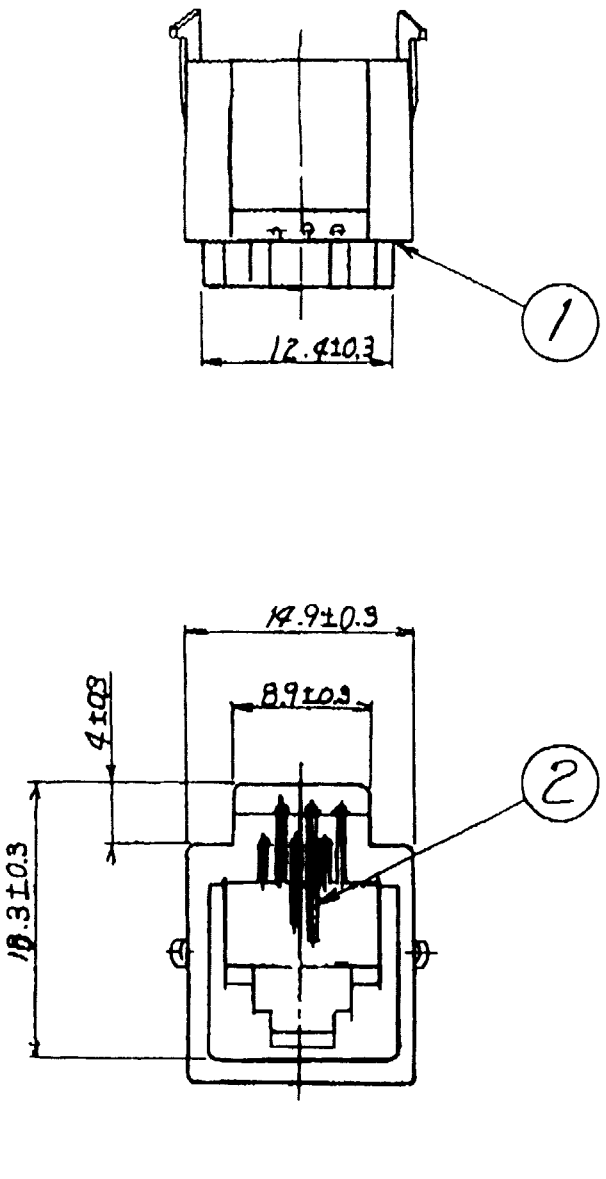

RECOMMENDED PC BOARD HOLE PATTERN (4:1)
(MOUNTING SIDE)

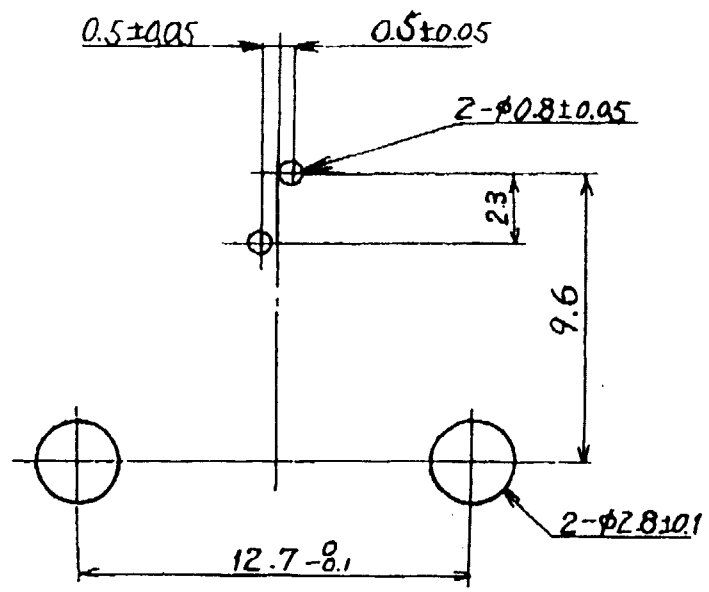

HRS DRAWING FOR REFERENCE

NO.	MATERIAL	FINISH, REMARKS	NO.	MATERIAL	FINISH, REMARKS
1	PBT	UL94V-0 (VANILLA WHITE)	2	PHOSPHOR BRONZE	SELECTIVE GOLD PLATING 1.27μm

CODE NO.(OLD)	DRAWN	DESIGNED	CHECKED	APPROVED	RELEASED
	J. Hamaya 03.12.15	J. Hamaya 03.12.15	J. Watanabe 03.12.16	Y. Miura 03.12.16	

SCALE 2 : 1	DRAWING NO. EDC3-021609-01	PART NO. TM3RA-62(50)
UNITS mm	HRS HIROSE ELECTRIC CO.,LTD.	CODE NO. CL222-0567-8-50 1/1

FORM NO.229

TO
Q