Jan.1.2026 Copyright 2026 HIROSE ELECTRIC CO., LTD. All Rights Reserved.
In case of consideration for using Automotive equipment / device which demand high reliability, kindly contact our sales window correspondents.

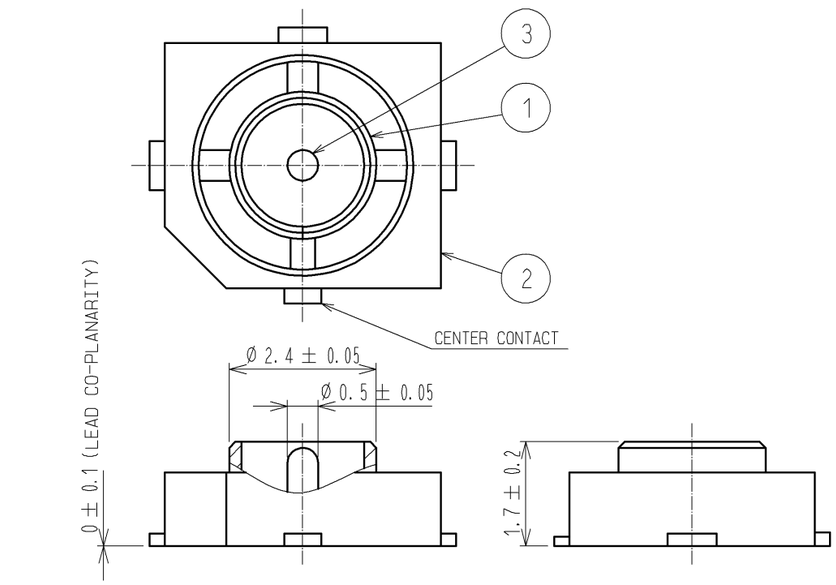

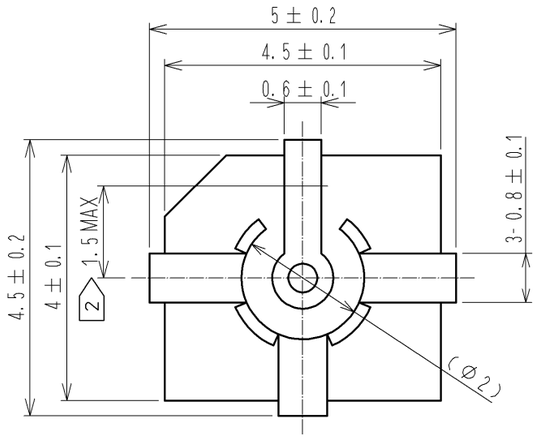

RECOMMENDED PC BORD
PATTERN DRAWING(5:1)

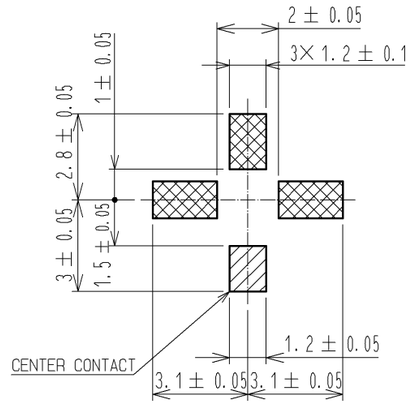

EMBOSSED TAPING DRAWING(4:1)

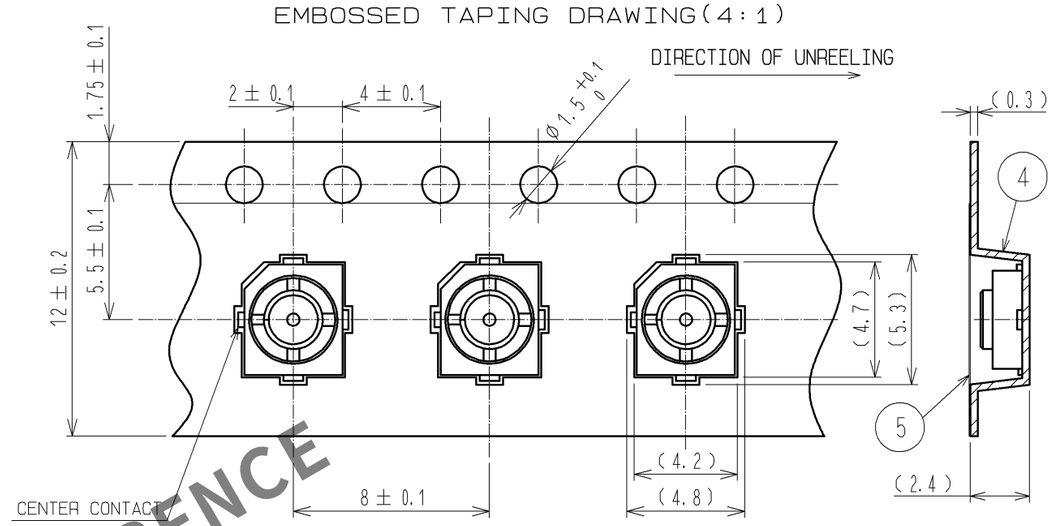

RECOMMENDED METAL MASK
PATTERN DRAWING(5:1)

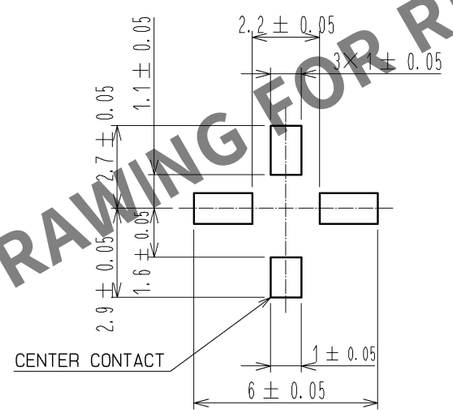

THICKNESS: 0.1mm~0.15mm

MOUNTING TEMPERATURE PROFILE(REFERENCE)

RE-FLOW TIMES:2 TIMES MAX

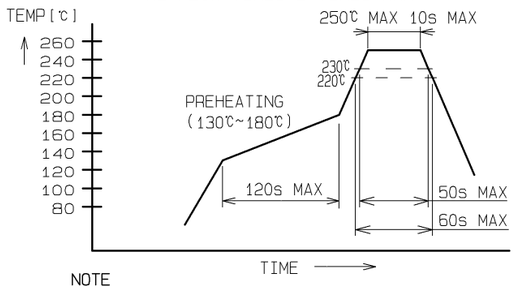

NOTE
MOUNTING TEMPERATURE PROFILE VARIES ACCORDING TO BOARD SIZE, SOLDER TYPE APPLIED AND SOLDER THICKNESS.

[PACKAGE SPECIFICATION](FREE)

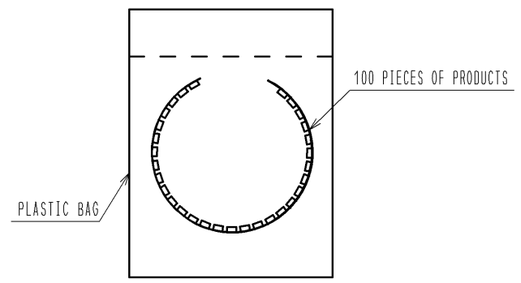

NOTE 1. THE QUANTITY OF H.FL/S-R-SMT(10) IS 100 CONNECTORS PER PACK.

2 THIS DIMENSION SHOWS THE ALLOWABLE RANGE THAT THE RESIN IS PUT OVER THE CENTER CONTACT.

3. FOR THE POSSIBILITY OF BREAKAGE OR DEFORMATION, DO NOT MATE THIS CONNECTOR WITH PARTNER, H.FL/S-LP-*** BEFORE MOUNTING ON PC BOARD.

4. USE ALL PRODUCTS WITHIN 6 MONTHS AFTER THE DELIVERY. STORE THEM IN MANUFACTURER'S PACKAGE OR TIGHTLY RE-CLOSED BOX WITH THE FOLLOWING CONDITIONS. CHECK THE TERMINAL SOLDERABILITY BEFORE USE IF THE PRODUCT HAS BEEN STORED FOR MORE THAN 6 MONTHS.
TEPERATURE: -10℃ TO +40℃
HUMIDITY : 15 TO 85% RH.

5. ENVIRONMENTAL CONDITIONS
DO NOT USE THE PRODUCTS UNDER THE ENVIRONMENTAL CONDITIONS AS SHOWN BELOW DUE TO POSSIBLE PRODUCT DETERIORATION.
SPECIAL GAS ATMOSPHERE(HYDROGEN SULFIDE GAS, SULFUR SULFIDE GAS AND HYDROGEN CHLORIDE GAS)
PLACE ATTENTION REQUIRED: HEATING SYSTEM, AREA NEAR HOT SPRING, VOLCANIC MOUNTAIN AND ALIKE.
WATER SPLACHED AND CONDENSATION PLACES.
PLACE ATTENTION REQUIRED: HARSH TEMPERATURE CHANGE.

6. THIS IS A NON-MAGNETIC CONNECTOR.

100PCS/PACK.
RoHS COMPLIANT
NON MAGNETIC

NO.	MATERIAL	FINISH , REMARKS	NO.	MATERIAL	FINISH , REMARKS
3	BRASS	SILVER PLATING			
2	LCP	(BLACK), UL94V-0	5	PET	
1	PHOSPHOR BRONZE	SILVER PLATING	4	PS	

UNITS	SCALE	COUNT	DESCRIPTION OF REVISIONS	DESIGNED	CHECKED	DATE
mm	10 : 1					

HIROSE ELECTRIC CO., LTD.

APPROVED	: MH. YAMANE	14. 03. 31	DRAWING NO.	EDC3-325188-01
CHECKED	: NK. NINOMIYA	14. 03. 28	PART NO.	H. FL/S-R-SMT(01)
DESIGNED	: RO. YOKOYAMA	14. 03. 28	CODE NO.	CL331-0805-3-01
DRAWN	: RO. YOKOYAMA	14. 03. 28		1/1

HRS DRAWING FOR REFERENCE