Jan.1.2026 Copyright 2026 HIROSE ELECTRIC CO., LTD. All Rights Reserved.
In case of consideration for using Automotive equipment / device which demand high reliability, kindly contact our sales window correspondents.

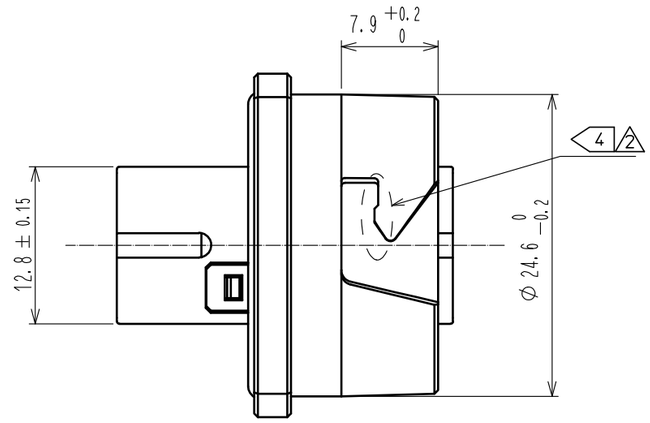

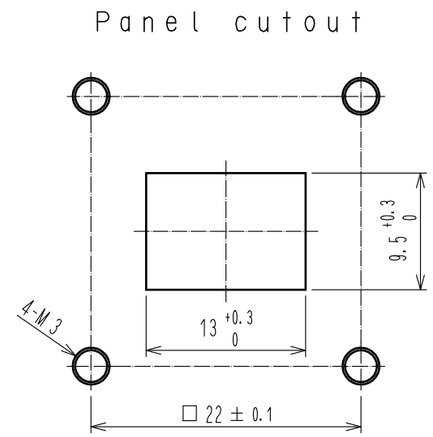

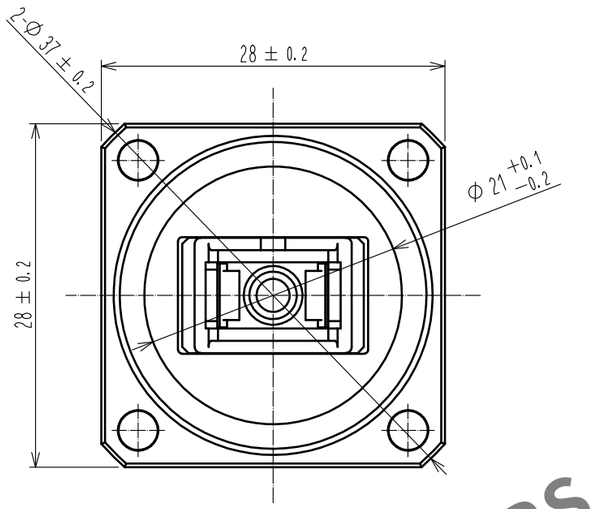

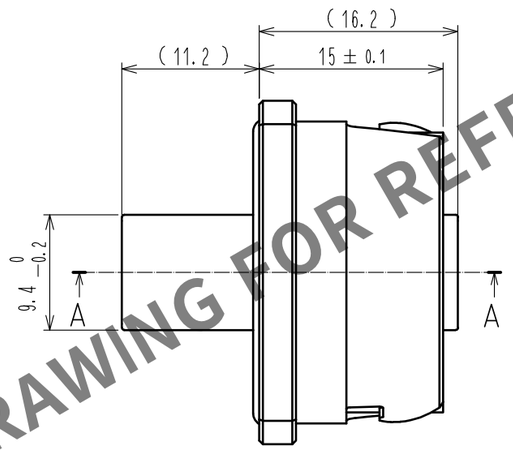

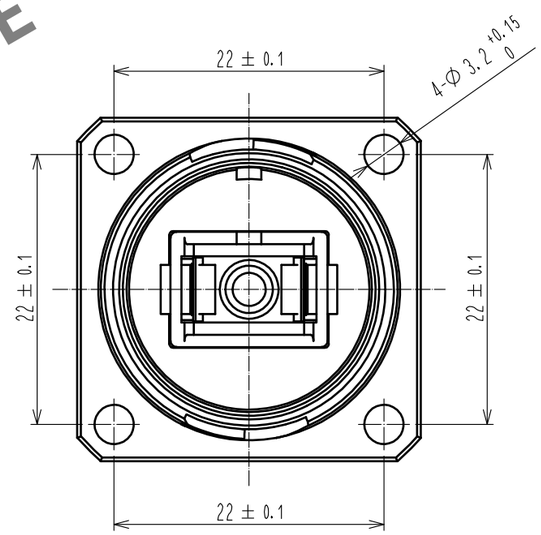

HRS DRAWING FOR REFERENCE

A − A

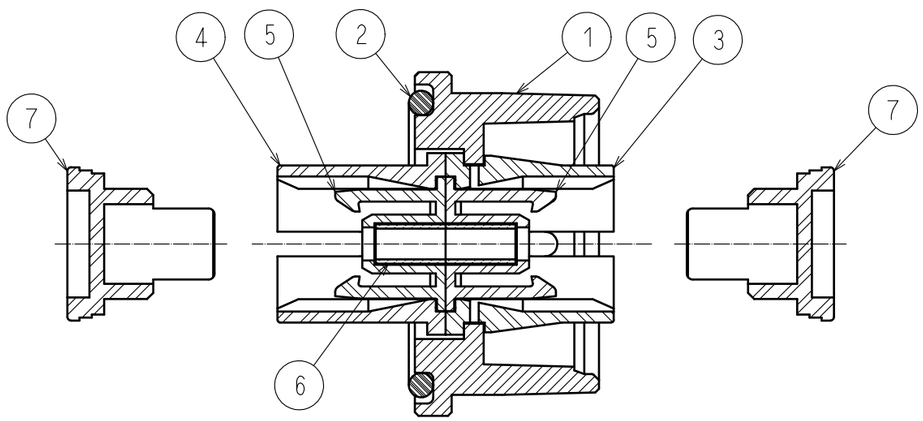

NOTE
1 The adapter cap (Ref. no. ⑦) is installed.
2 The waterproof cap for this products is option.
3 Please buy CL717-5002-2-02 when the tray is necessary. Vinyl pack.
2 4 If the connector is tight, apply a commercially available fluorinated semi-wet lubricant at the position shown in the figure and at the 180° opposite positon. (ex. Kanto Kasei HANARL UD-321®)

NO.	MATERIAL	FINISH , REMARKS	NO.	MATERIAL	FINISH , REMARKS
4	PPS	Blue			
3	PPS	Blue	7	PP	Blue
2	Silicone Rubber	Red	6	Zirconia	Split sleeve
1	Zinc Alloy Die Casting	Cr plating , Black	5	PBT	Blue

UNITS	SCALE		COUNT	DESCRIPTION OF REVISIONS	DESIGNED	CHECKED	DATE
mm	2 : 1	2	2	DIS-K-00006684	TY. SATO	SJ. SUZUKI	20220624

HRS HIROSE ELECTRIC CO., LTD.

APPROVED	: YY. HIYAMA	20121012	DRAWING NO.	EDC3-176756-04
CHECKED	: YY. HIYAMA	20121012	PART NO.	SW20-SCR-1(01)
DESIGNED	: YH. MASUZAKI	20121012	CODE NO.	CL0717-5002-2-01
DRAWN	: YH. MASUZAKI	20121012		2 1/1

FORM HC0011-5-7