Oct.1.2025 Copyright 2025 HIROSE ELECTRIC CO., LTD. All Rights Reserved.
In case of consideration for using Automotive equipment / device which demand high reliability, kindly contact our sales window correspondents.

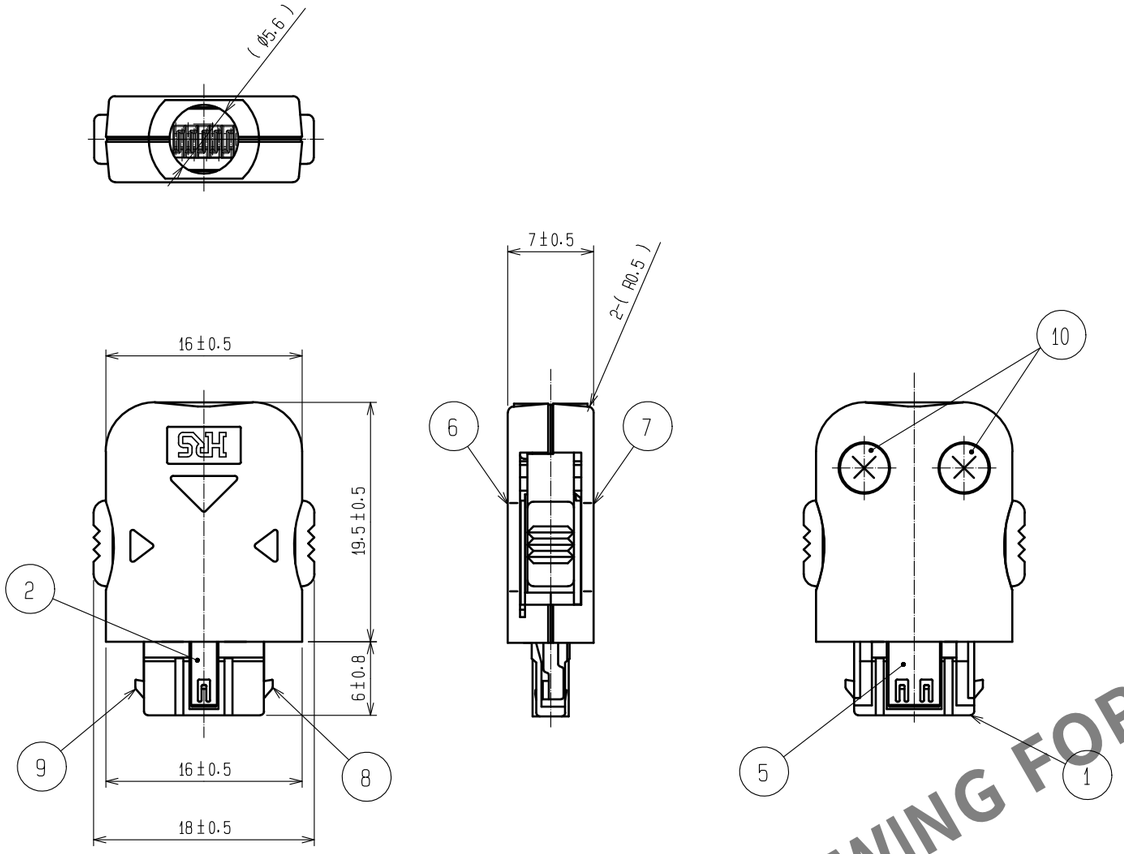

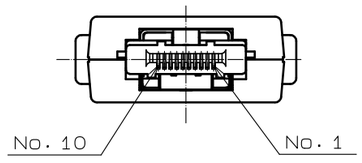

2 Bushing, assembly dimensions for reference

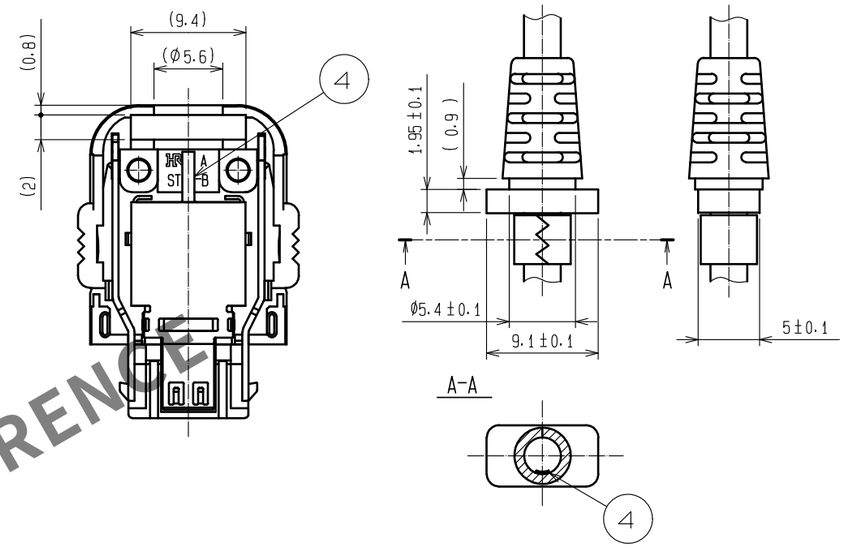

Cable shield is connected by caulking of the clamp metal (Commercial item) Fitting with connector shield ref ④.

Connector unit

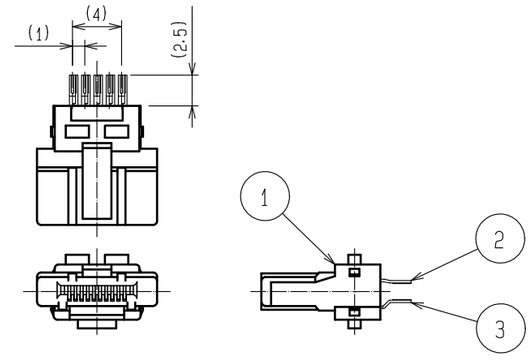

Note 1 Less than Ø4 mm is presumed cable size.

2 Cable shall be overmolded with bushing to fix.
Use non-migration resin for overmolding.

3 <Plating>
Contact area:gold plated 0.2μm min.
Lead area:gold plated flash.
Under plating:nickel plated 2μm min.
The product is delivered in following conditions:
Unit with ref ①assembled to ref② and ③, cover with ref ⑥assembled to ref⑧ and ⑨, and ref ④, ⑤, ⑦, ⑩ disassembled.

△2 4 Refer to the technical specification(ETAP-E3217)for packing.

HRS DRAWING FOR REFERENCE

NO.	MATERIAL	FINISH , REMARKS	NO.	MATERIAL	FINISH , REMARKS
5	Stainless steel		10	Steel	BLACK CHROMATE Cr3.(TAPPING SCREW)
4	Stainless steel		9	Stainless steel	
3	Copper alloy	3	8	Stainless steel	
2	Copper alloy	3	7	PC	(BLACK)UL
1	PA	(BLACK)UL94V-0	6	PC	(BLACK)UL

UNITS	SCALE		COUNT	DESCRIPTION OF REVISIONS	DESIGNED	CHECKED	DATE
mm	2 : 1	△2	1	DIS-E-00009892	KN. ICHIKAWA	KG. OKITA	20220624

HIROSE ELECTRIC CO., LTD.

APPROVED	: NM. NISHIMATSU	20151027	DRAWING NO.	EDC-124682-30-00
CHECKED	: KN. ICHIKAWA	20151027	PART NO.	ST40X-10S-CV(30)
DESIGNED	: TS. ITO	20151027		
DRAWN	: AK. AKIYAMA	20151027	CODE NO.	CL0241-0041-0-30 △2 1/1

FORM HC0011-5-7