Jan.1.2026 Copyright 2026 HIROSE ELECTRIC CO., LTD. All Rights Reserved.
In case of consideration for using Automotive equipment / device which demand high reliability, kindly contact our sales window correspondents.

	COUNT	DESCRIPTION OF REVISIONS	BY	CHKD	DATE		COUNT	DESCRIPTION OF REVISIONS	BY	CHKD	DATE
△					. .	△					. .
△					. .	△					. .
△					. .	△					. .

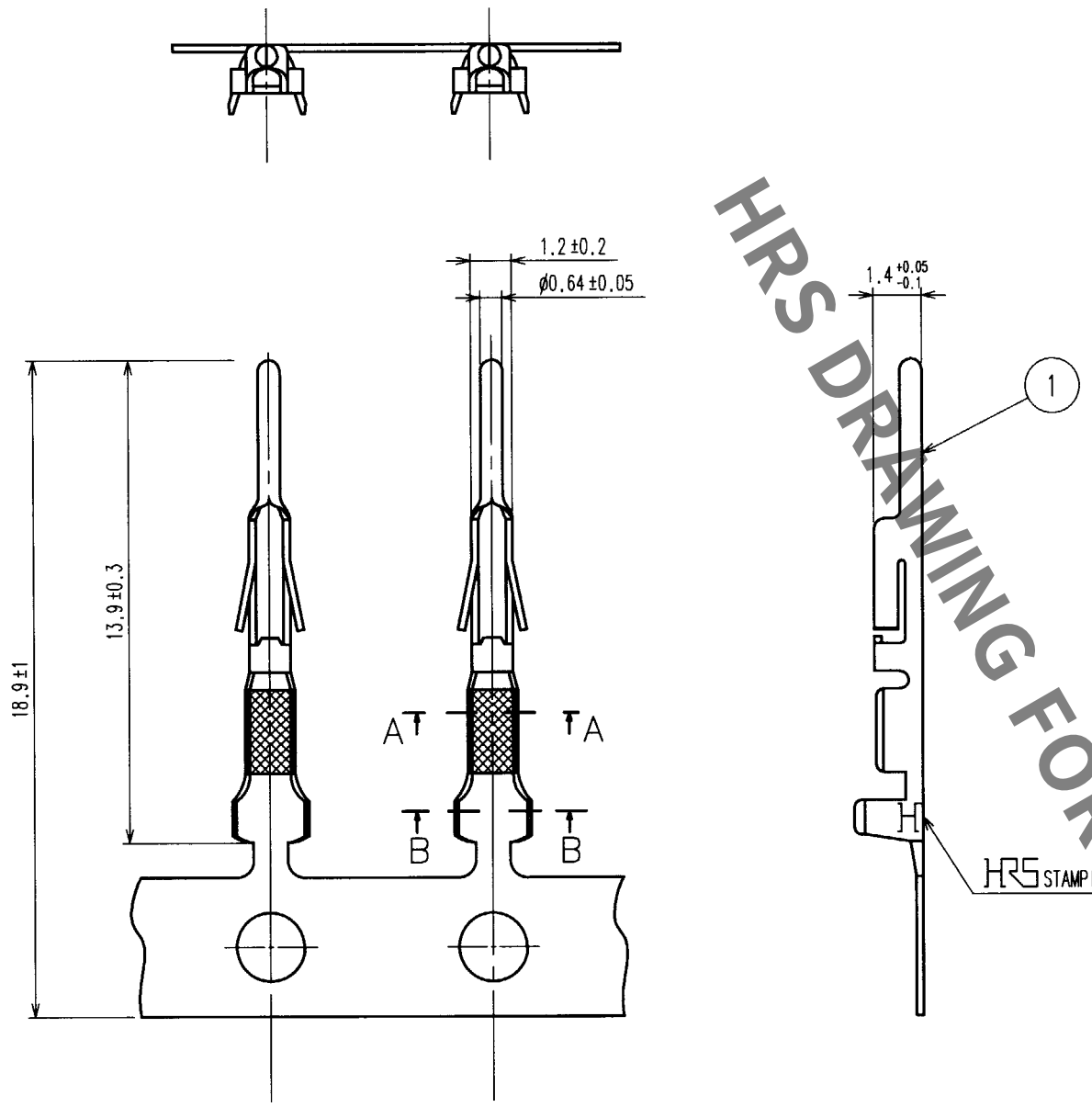

HRS DRAWING FOR REFERENCE

A – A

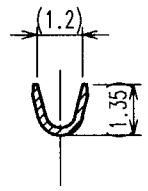

B – B

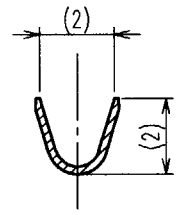

2 REEL(10:1)

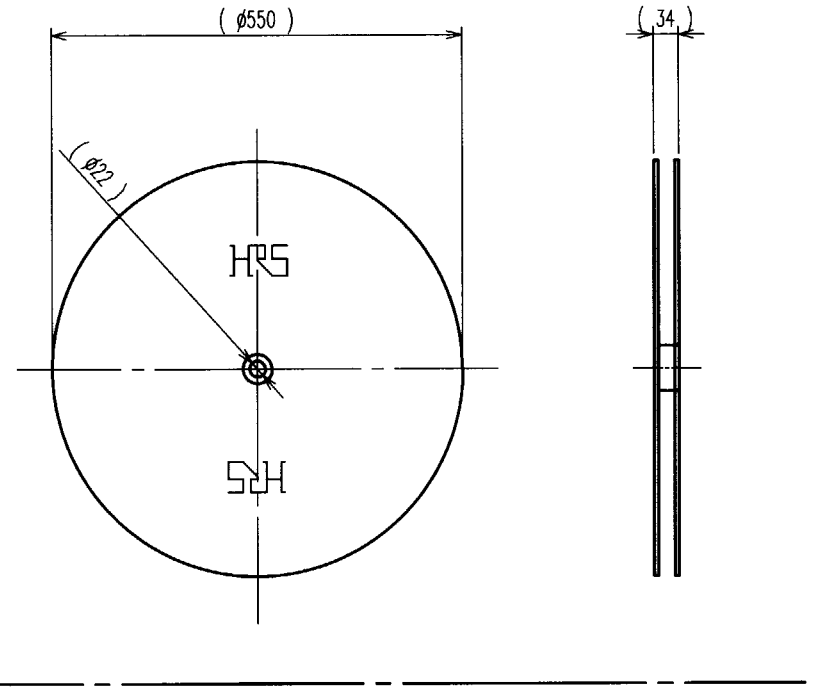

NOTE 1 APPLICABLE WIRE SIZE: AWG#24 TO 28

NO.	MATERIAL	FINISH, REMARKS	NO.	MATERIAL	FINISH, REMARKS
1	PHOSPHOR BRONZE	SILVER PLATING(N=10000)	2	CARTON	(REEL)

CODE NO.(OLD)	DRAWN	DESIGNED	CHECKED	APPROVED	RELEASED
CL	E. YUMINO 00·10·10	E. YUMINO 00·10·16	M. Sato 00·10·10	M. Yoshida 00·10·11	. .

SCALE 5 : 1	DRAWING NO. EDC3-009135	PART NO. RP13-PC-222
UNITS mm	HRS HIROSE ELECTRIC CO., LTD	CODE NO. CL113-0141-7 1/1

TO
R