Feb.1.2026 Copyright 2026 HIROSE ELECTRIC CO., LTD. All Rights Reserved.
In case of consideration for using Automotive equipment / device which demand high reliability, kindly contact our sales window correspondents.

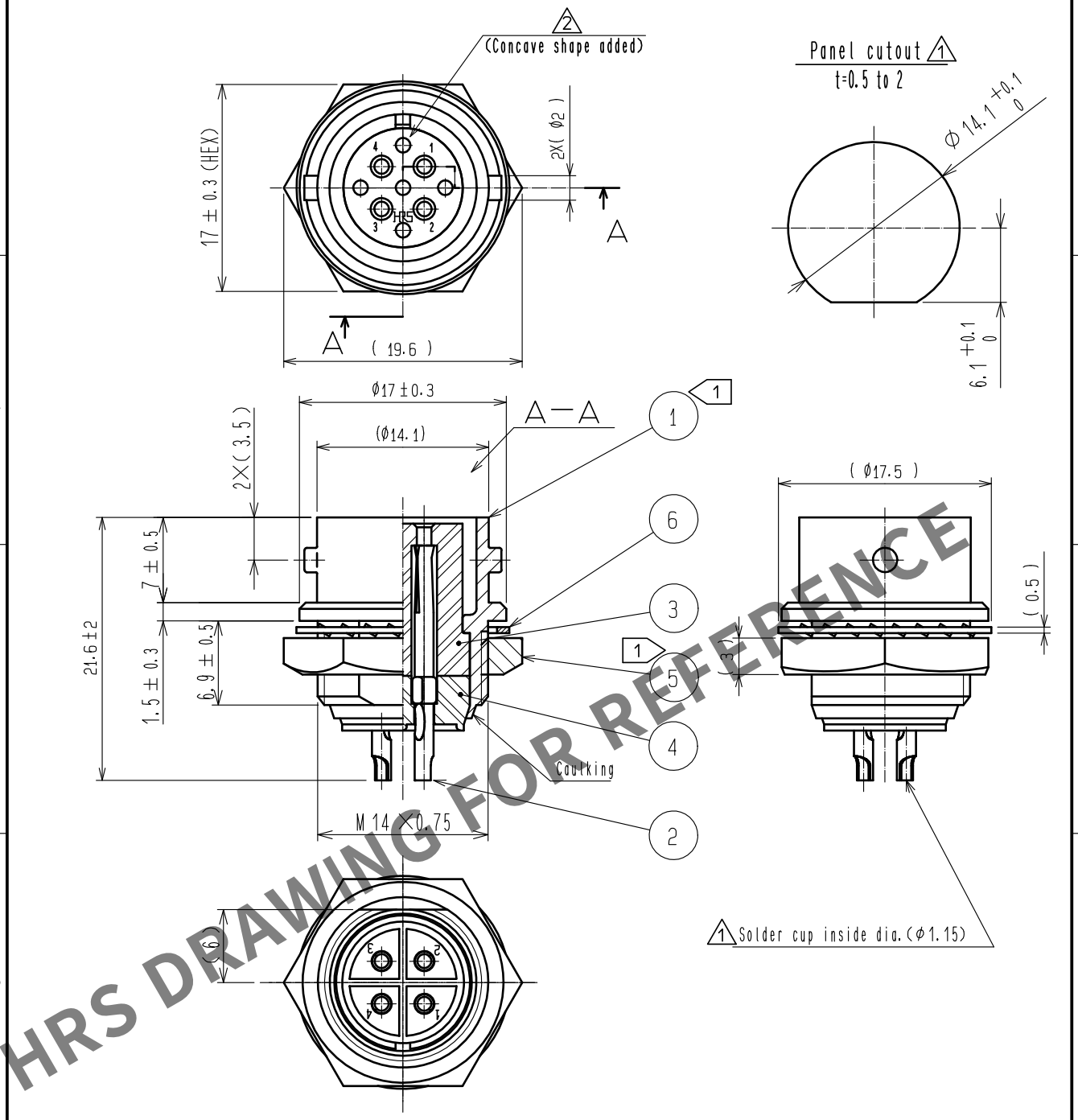

Note 1 The tighteninig torque of Ref. No. ⑤: 2 to 2.5 N・m.
Apply Loctite 243 HENKEL JAPAN or equivalent to the threaded portion (M14×0.75) of Ref. No.① in order to prevent loosening.

NO.	MATERIAL	FINISH . REMARKS	NO.	MATERIAL	FINISH . REMARKS
3	Polyphenylene sulfide	(Black)	6	Phosphor bronze	Nickel plating
2	Copper alloy	Silver plating 5μm min.	5	Brass	Nickel plating
1	Zinc alloy	Matte finish nickel plated	4	Polyphenylene sulfide	(Black)

UNITS	SCALE		COUNT	DESCRIPTION OF REVISIONS	DESIGNED	CHECKED	DATE
mm	2 : 1	2	1	DIS-C-00016513	TY. SUZUKI	HY. KOBAYASHI	20231113

HIROSE ELECTRIC CO., LTD.

APPROVED	TP. KOMATSU	20230419
CHECKED	TP. KOMATSU	20230419
DESIGNED	HT. ZENBA	20230419
DRAWN	KR. SUZUKI	20230419

DRAWING NO.	EDC-006764-81-00
PART NO.	RM12BRD-4S(81)
CODE NO.	CL0109-0611-0-81

2 1/1

FORM HC0011-5-51