Dec.1.2025 Copyright 2025 HIROSE ELECTRIC CO., LTD. All Rights Reserved.
In case of consideration for using Automotive equipment / device which demand high reliability, kindly contact our sales window correspondents.

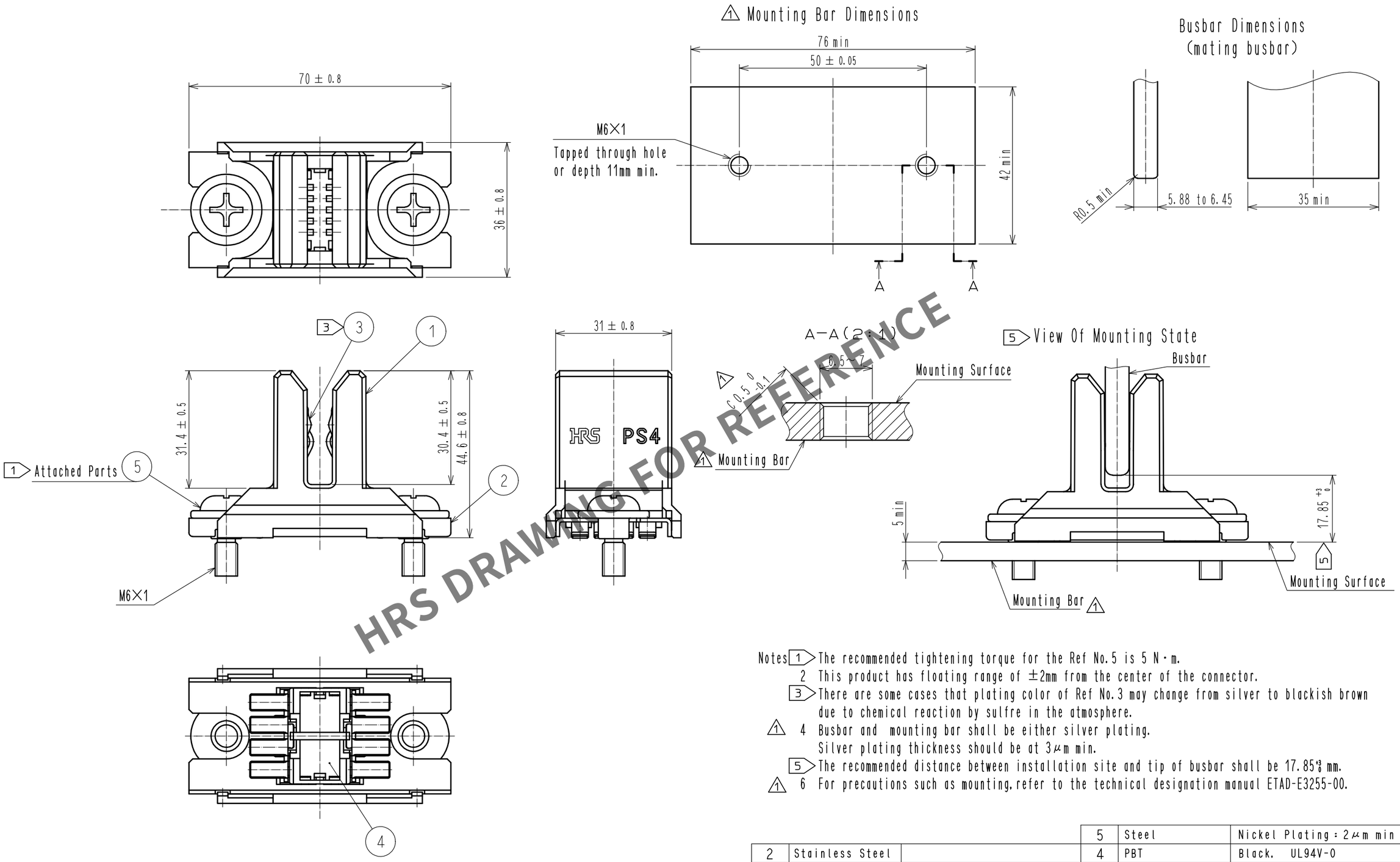

HRS DRAWING FOR REFERENCE

Notes
1. The recommended tightening torque for the Ref No.5 is 5 N・m.
2. This product has floating range of ±2mm from the center of the connector.
3. There are some cases that plating color of Ref No.3 may change from silver to blackish brown due to chemical reaction by sulfre in the atmosphere.
4. Busbar and mounting bar shall be either silver plating. Silver plating thickness should be at 3μm min. (△1)
5. The recommended distance between installation site and tip of busbar shall be 17.85^{+3}_{0} mm.
6. For precautions such as mounting, refer to the technical designation manual ETAD-E3255-00. (△1)

NO.	MATERIAL	FINISH . REMARKS	NO.	MATERIAL	FINISH . REMARKS
			5	Steel	Nickel Plating : 2μm min
2	Stainless Steel		4	PBT	Black, UL94V-0
1	PBT	Black, UL94V-0	3	Copper Alloy	Silver Plating : 2μm min

UNITS	SCALE		COUNT	DESCRIPTION OF REVISIONS	DESIGNED	CHECKED	DATE
mm	1 : 1	△1	6	DIS-E-00011064	MO. SHIMOYAMA	KG. OKITA	20220909

HRS HIROSE ELECTRIC CO., LTD.

APPROVED	: MN. KENJO	20220711	DRAWING NO.	EDC-398500-00-00
CHECKED	: KG. OKITA	20220711	PART NO.	PS4-6.35T-F19
DESIGNED	: MO. SHIMOYAMA	20220708	CODE NO.	CL0236-1087-0-00 △1 1/1
DRAWN	: MO. SHIMOYAMA	20220708		

FORM HC0011-5-7