Feb.1.2026 Copyright 2026 HIROSE ELECTRIC CO., LTD. All Rights Reserved.
In case of consideration for using Automotive equipment / device which demand high reliability, kindly contact our sales window correspondents.

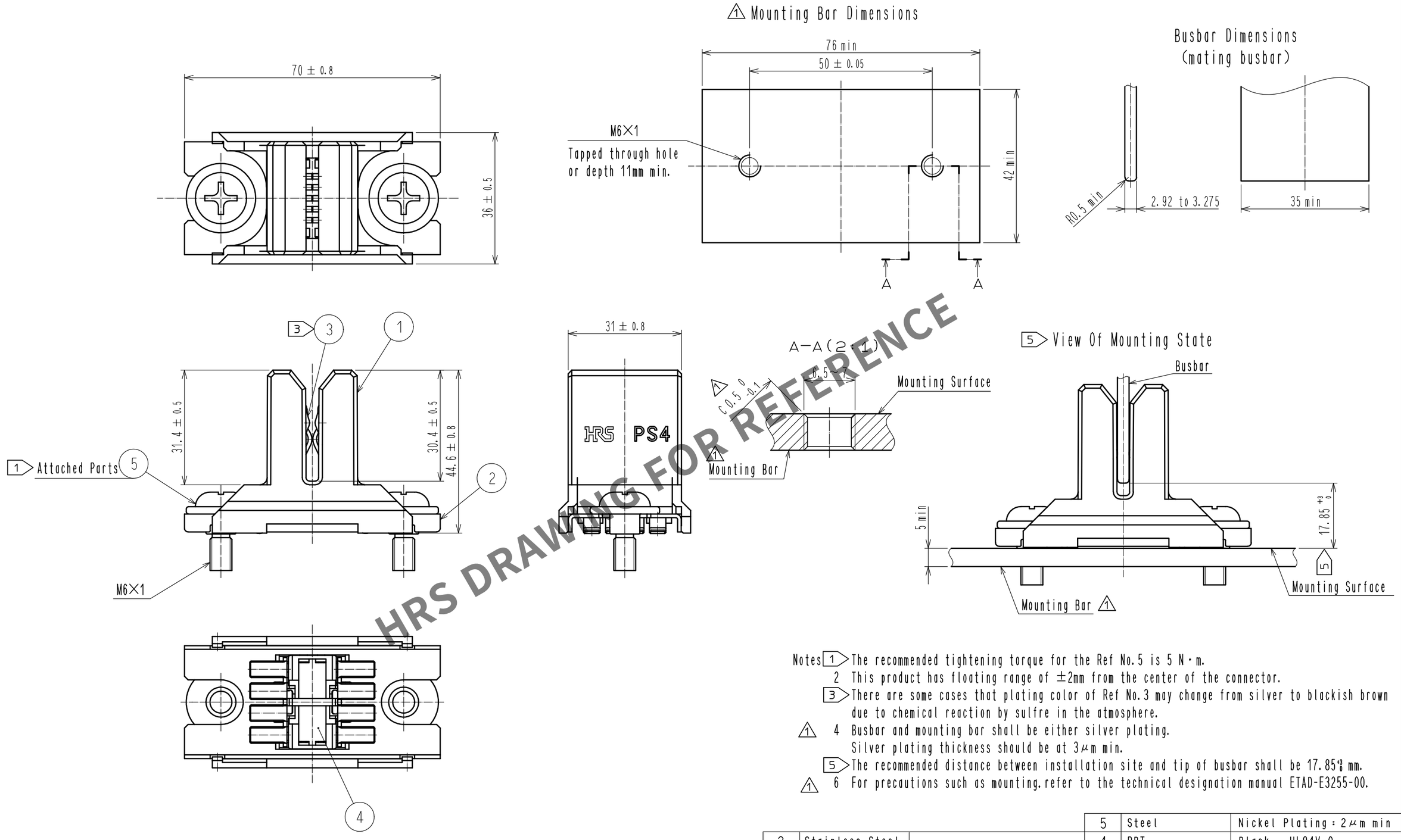

HRS DRAWING FOR REFERENCE

Notes 1 The recommended tightening torque for the Ref No.5 is 5 N・m.
2 This product has floating range of ±2mm from the center of the connector.
3 There are some cases that plating color of Ref No.3 may change from silver to blackish brown due to chemical reaction by sulfre in the atmosphere.
1 4 Busbar and mounting bar shall be either silver plating.
Silver plating thickness should be at 3μm min.
5 The recommended distance between installation site and tip of busbar shall be 17.85 +3 0 mm.
1 6 For precautions such as mounting, refer to the technical designation manual ETAD-E3255-00.

NO.	MATERIAL	FINISH , REMARKS	NO.	MATERIAL	FINISH , REMARKS
2	Stainless Steel		4	PBT	Black, UL94V-0
1	PBT	Black, UL94V-0	3	Copper Alloy	Silver Plating : 2μm min
			5	Steel	Nickel Plating : 2μm min

UNITS	SCALE		COUNT	DESCRIPTION OF REVISIONS	DESIGNED	CHECKED	DATE
mm	1 : 1	1	6	DIS-E-00011064	MO. SHIMOYAMA	KG. OKITA	20220909

HIROSE ELECTRIC CO., LTD.

APPROVED	: MN. KENJO	20220711	DRAWING NO.	EDC-398501-00-00
CHECKED	: KG. OKITA	20220711	PART NO.	PS4-3.175T-F19
DESIGNED	: MO. SHIMOYAMA	20220708	CODE NO.	CL0236-1088-0-00
DRAWN	: MO. SHIMOYAMA	20220708		1 / 1

FORM HC0011-5-7