Jan.1.2026 Copyright 2026 HIROSE ELECTRIC CO., LTD. All Rights Reserved.
In case of consideration for using Automotive equipment / device which demand high reliability, kindly contact our sales window correspondents.

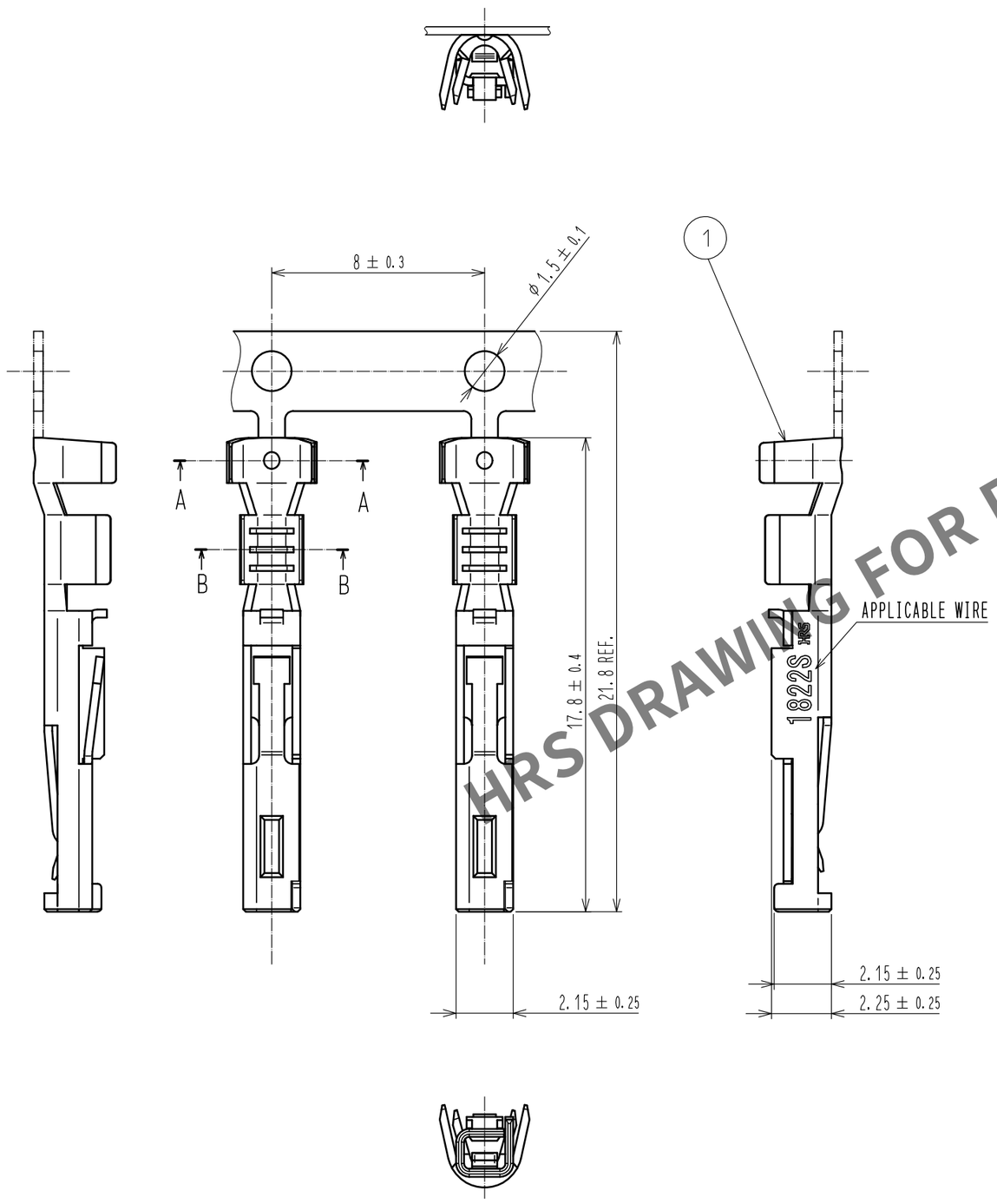

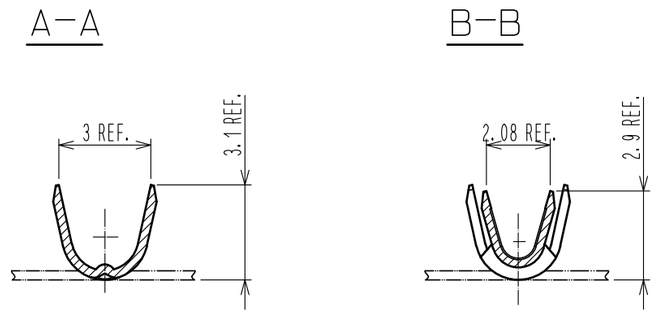

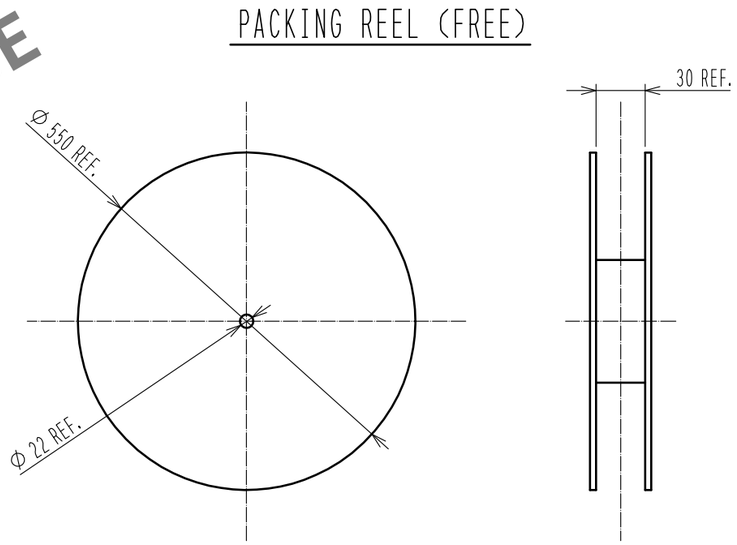

HRS DRAWING FOR REFERENCE

NOTES
1. APPLICABLE WIRE IS AWG #17～#22. (UL1007 : AWG #18～#22)
   INSURATION DIAMETER φ2.25mm MAX.
2. PER REEL : 6000 CONTACTS.
3. APPLICABLE CRIMPING MACHINE AND CRIMPING CONDITIONS
   WILL BE SPECIFIED ACCORDING TO AWG# OR WIRE APPLIFED.
4. REFER TO ETAD-E2961 FOR INCORPORABLE CONNECTOR PARTS AND APPLICABLE CONNECTOR.
5. REFER TO ATAD-E3238 FOR CRIMP QUALITY STANDARDS.

NO.	MATERIAL	FINISH . REMARKS	NO.	MATERIAL	FINISH . REMARKS
			1	COPPER ALLOY	CONTACT AREA : GOLD PLATING 0.2μm min TERMINAL AREA : TIN PLATING 1μm min UNDER : NICKEL PLATING 0.5μm min

UNITS	SCALE	COUNT	DESCRIPTION OF REVISIONS	DESIGNED	CHECKED	DATE
mm	5 : 1	0				

HRS HIROSE ELECTRIC CO., LTD.

APPROVED	: MN. KENJO	20211222	DRAWING NO.	EDC-397156-00-00
CHECKED	: KG. OKITA	20211221	PART NO.	PQ50S2-1822SCFA
DESIGNED	: HY. MATSUDA	20211221	CODE NO.	CL0236-0036-0-00
DRAWN	: HY. MATSUDA	20211221		0 1/1

FORM HC0011-5-7