Feb.1.2026 Copyright 2026 HIROSE ELECTRIC CO., LTD. All Rights Reserved.
In case of consideration for using Automotive equipment / device which demand high reliability, kindly contact our sales window correspondents.

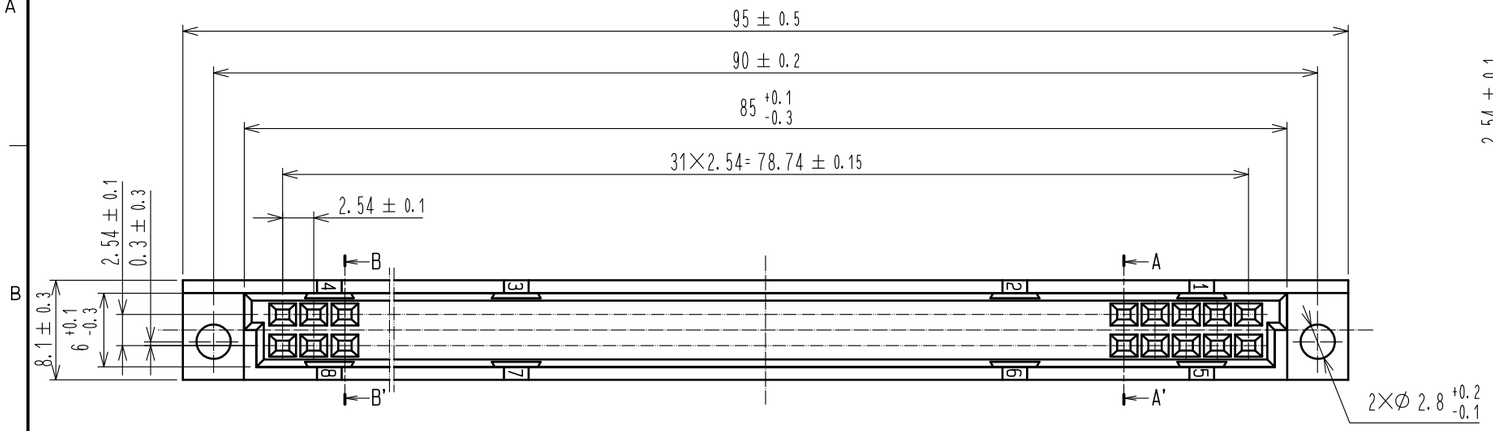


Recommended PC board hole pattern(t=1.6±0.1)

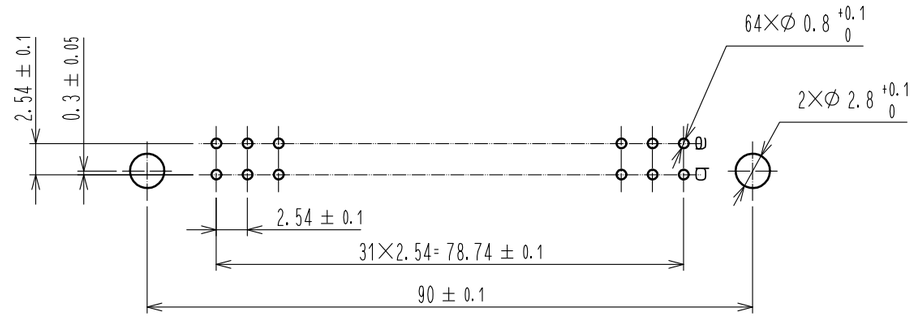


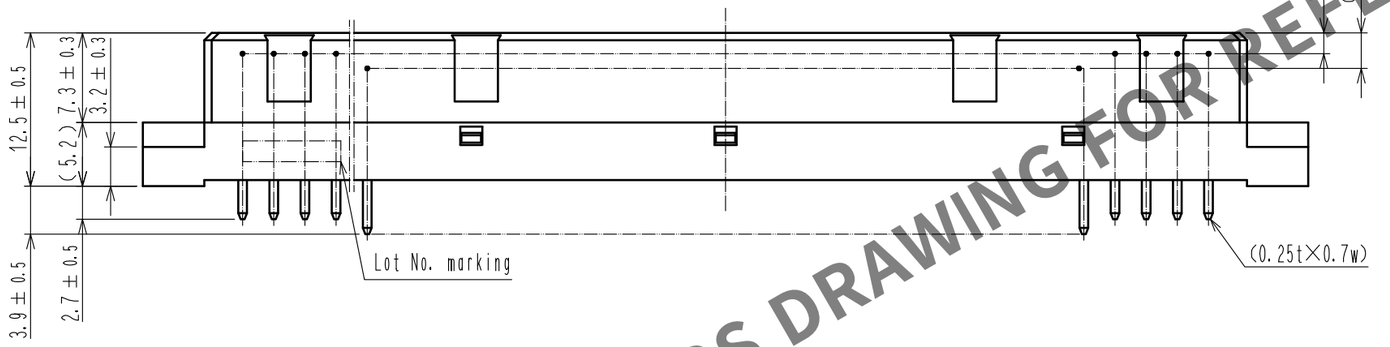


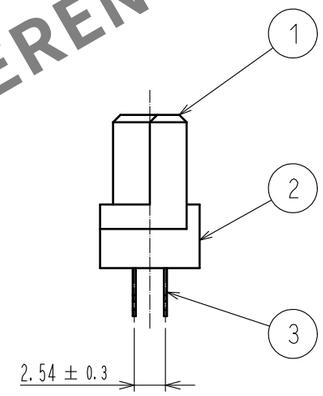


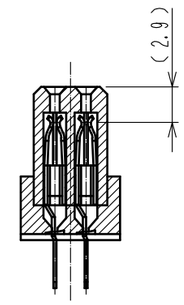


A-A' SECTION

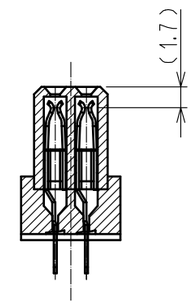


B-B' SECTION

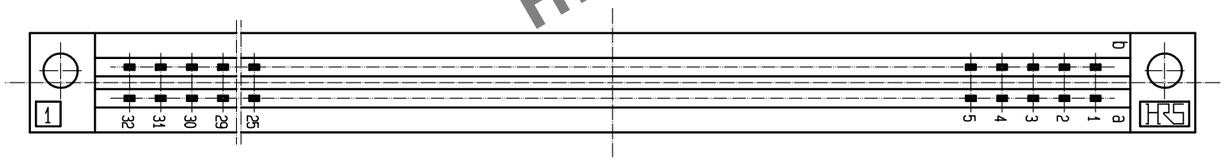


Notes
1. Sequence contacts are No.1~4, 26~32, Total 22 contacts.
2. The dimension in parenthesis is for reference.
3. UL(File No.E134282)

HRS DRAWING FOR REFERENCE

| NO. | MATERIAL | FINISH . REMARKS | NO. | MATERIAL | FINISH . REMARKS |
|---|---|---|---|---|---|
| 1, 2 | PBT | BLACK UL94V-0 | 3 | COPPER ALLOY | CONTACT AREA : Ni1μm+Au0.2μm<br>DIP AREA : Ni1μm+Sn1μm |

| UNITS | SCALE | COUNT | DESCRIPTION OF REVISIONS | DESIGNED | CHECKED | DATE |
|---|---|---|---|---|---|---|
| mm | 2 : 1 | 1 | DIS-F-00017532 | YU. NAKADA | HT. YAMAGUCHI | 20230316 |

HIROSE ELECTRIC CO., LTD.

| | | | | |
|---|---|---|---|---|
| APPROVED | YH. YAMADA | 20210305 | DRAWING NO. | EDC-019609-52-00 |
| CHECKED | HT. YAMAGUCHI | 20210305 | PART NO. | PCN10MC-64S-2.54DSA(52) |
| DESIGNED | MM. ISHII | 20210303 | CODE NO. | CL0583-0213-0-52 |
| DRAWN | MM. ISHII | 20210303 | | 1/1 |

FORM HC0011-5-7