Feb.1.2026 Copyright 2026 HIROSE ELECTRIC CO., LTD. All Rights Reserved.
In case of consideration for using Automotive equipment / device which demand high reliability, kindly contact our sales window correspondents.

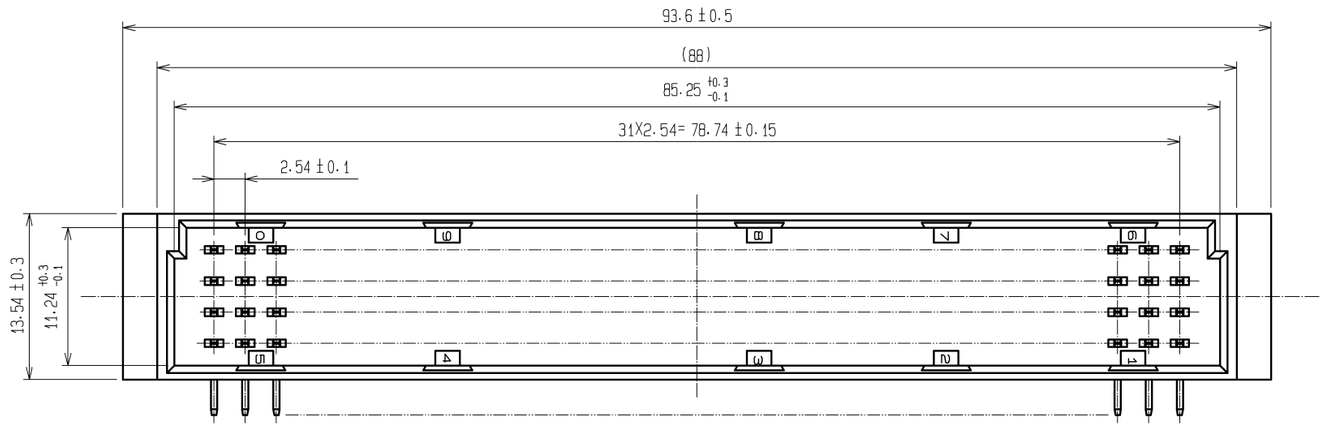


RECOMMENDED PC BOARD HOLE PATTERN(t=1.6±0.1)

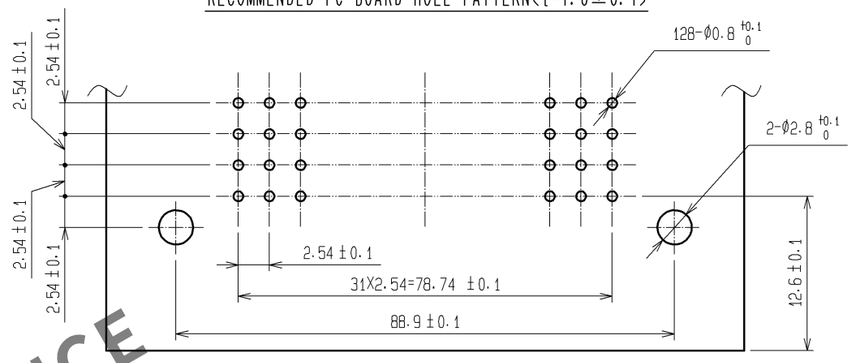


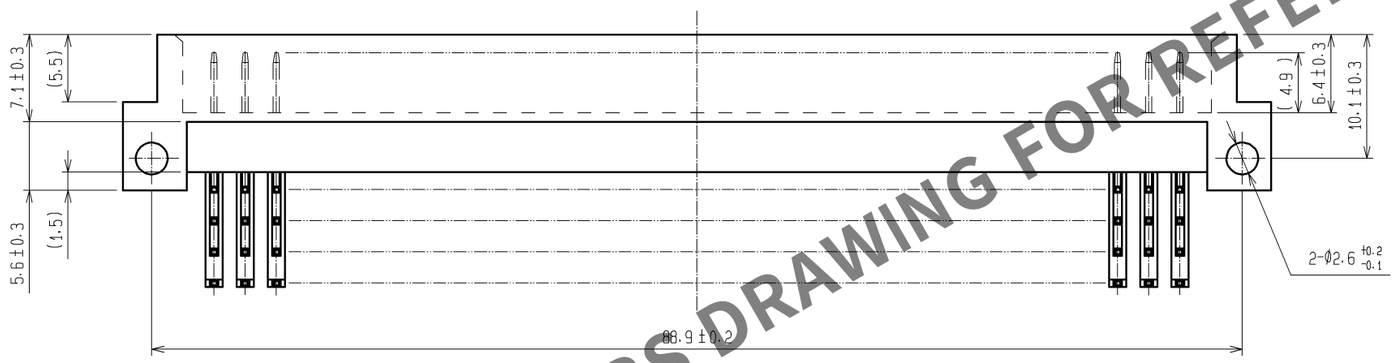


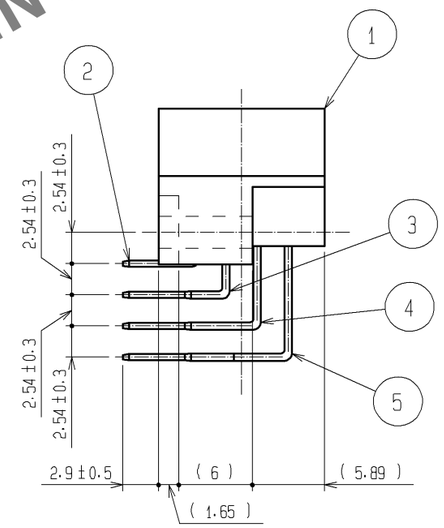


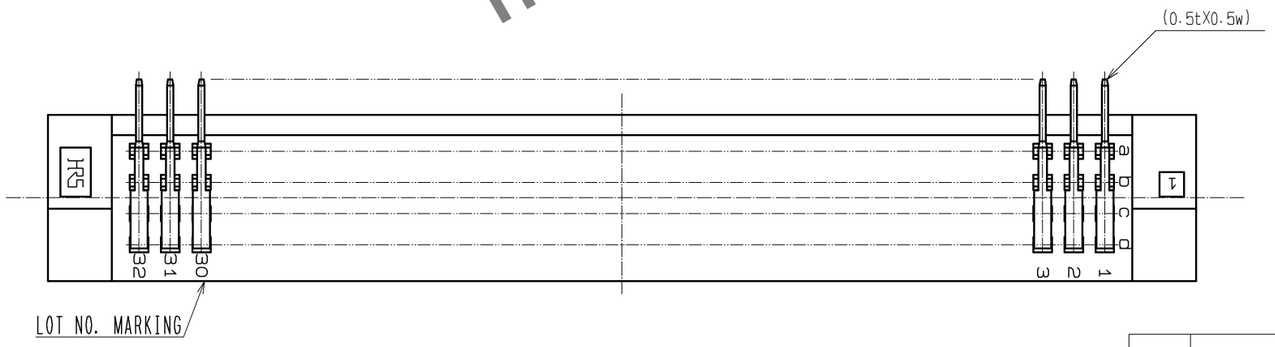


HRS DRAWING FOR REFERENCE

| NO. | MATERIAL | FINISH , REMARKS | NO. | MATERIAL | FINISH , REMARKS |
|---|---|---|---|---|---|
| 1 | PBT | GRAY UL94V-0 | 2 TO 5 | BRASS | CONTACT AREA : Ni2.5μm+Au0.2μm<br>MOUNTING AREA : Ni2.5μm+Sn2μm |

| UNITS | SCALE | COUNT | DESCRIPTION OF REVISIONS | DESIGNED | CHECKED | DATE |
|---|---|---|---|---|---|---|
| mm | 2 : 1 | | | | | |

HIROSE ELECTRIC CO., LTD.

| | | | | |
|---|---|---|---|---|
| APPROVED | KI. AKIYAMA | 09. 01. 29 | DRAWING NO. | EDC4-019111-01 |
| CHECKED | SI. TOMIOKA | 09. 01. 29 | PART NO. | PCN10A-128P-2.54DS(72) |
| DESIGNED | NH. SUGITA | 09. 01. 29 | CODE NO. | CL583-0088-0-72 |
| DRAWN | CR. TAKESHIMA | 09. 01. 29 | | |

1/1

FORM HC0011-5-7