Jan.1.2026 Copyright 2026 HIROSE ELECTRIC CO., LTD. All Rights Reserved.
In case of consideration for using Automotive equipment / device which demand high reliability, kindly contact our sales window correspondents.

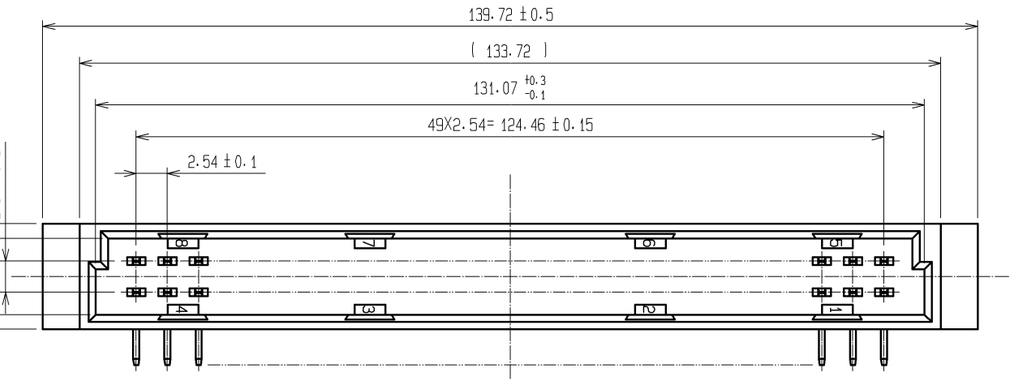

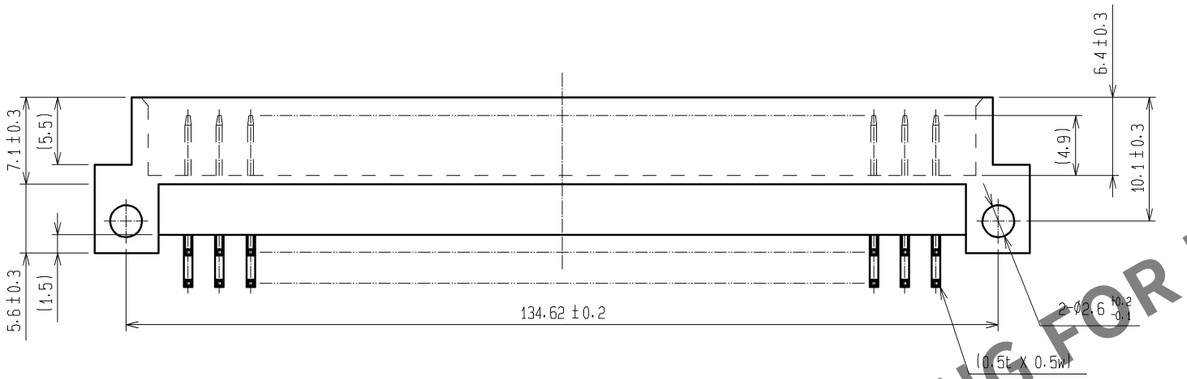

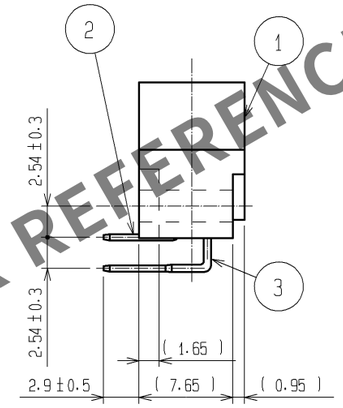

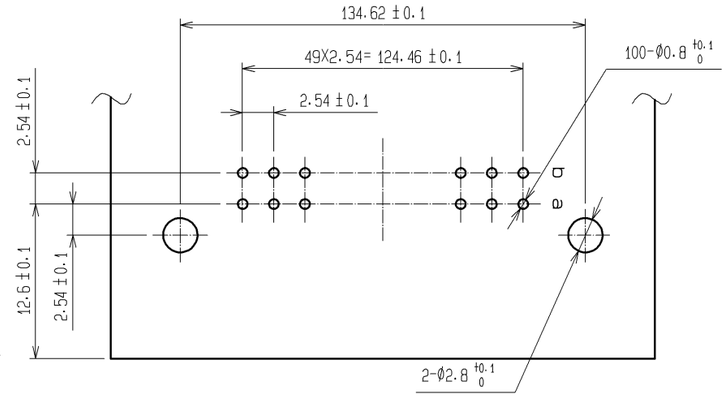

RECOMMENDED PC BOARD HOLE PATTERN(t=1.6± 0.1)

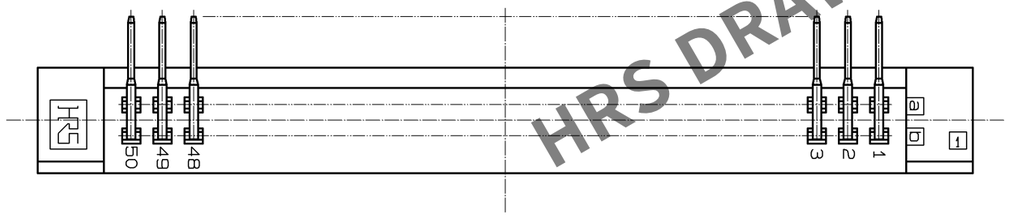

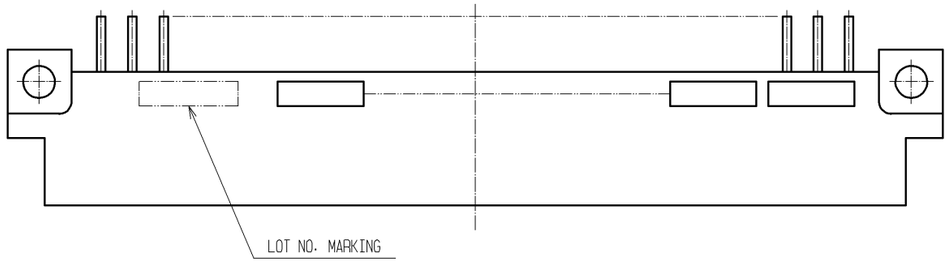

HRS DRAWING FOR REFERENCE

NO.	MATERIAL	FINISH, REMARKS	NO.	MATERIAL	FINISH, REMARKS
1	PBT	GRAY UL94V-0	2, 3	BRASS	CONTACT AREA :Ni2.5μm+Au0.2μm MOUNTING AREA:Ni2.5μm+Sn2μm

UNITS	SCALE	COUNT	DESCRIPTION OF REVISIONS	DESIGNED	CHECKED	DATE
mm	FREE					

HIROSE ELECTRIC CO., LTD.

APPROVED	:KI. AKIYAMA	07. 08. 31	DRAWING NO.	EDC4-019154-01
CHECED	:SI. TOMIOKA	07. 08. 31	PART NO.	PCN10A-100P-2.54DS(72)
DESIGNED	:NH. SUGITA	07. 08. 31	CODE NO.	CL583-0114-8-72
DRAWN	:NN. ONDA	07. 08. 27		

FORM HC0011-5-7