Jan.1.2026 Copyright 2026 HIROSE ELECTRIC CO., LTD. All Rights Reserved.
In case of consideration for using Automotive equipment / device which demand high reliability, kindly contact our sales window correspondents.

Perspective view
(1:1)

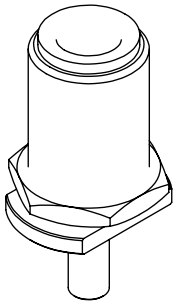

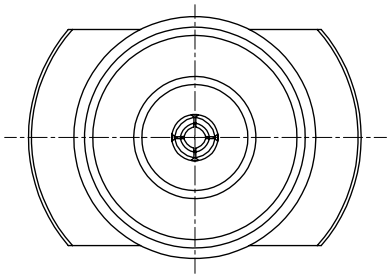

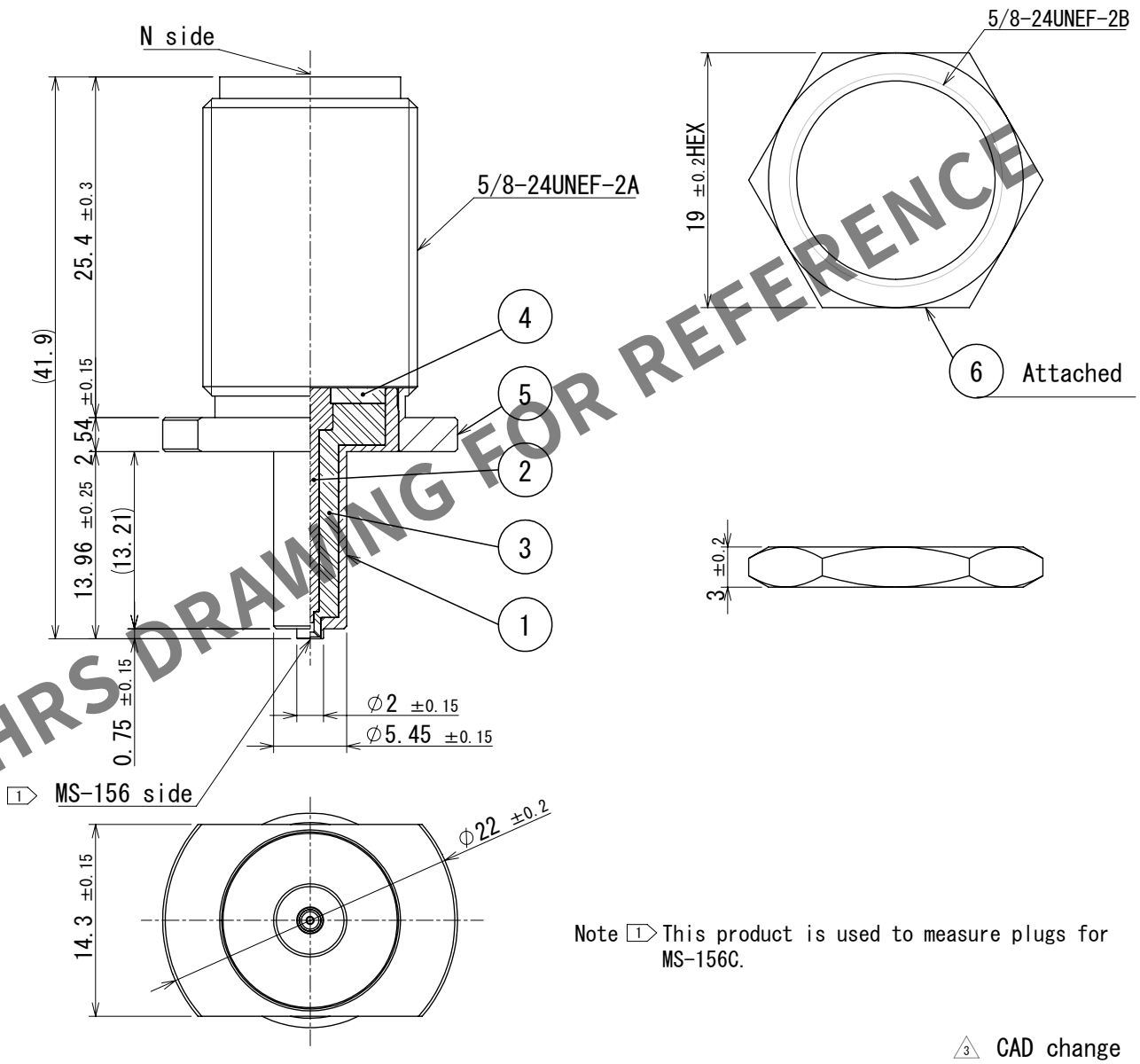

HRS DRAWING FOR REFERENCE

Note 1 This product is used to measure plugs for MS-156C.

3 CAD change

NO.	MATERIAL	FINISH , REMARKS	NO.	MATERIAL	FINISH , REMARKS
3	PTFE		6	Brass	Nickel plating
2	Beryllium copper	Gold plating	5	Brass	Nickel plating
1	Phosphor bronze	Gold plating	4	PTFE	

UNITS	SCALE	COUNT	DESCRIPTION OF REVISIONS	DESIGNED	CHECKED	DATE
mm	2:1	3 1	DIS-D-00017789	MK. INOUE	NK. NINOMIYA	2024.01.30

HIROSE ELECTRIC CO., LTD.

APPROVED	: KJ. KAWAMURA	2005.01.05
CHECKED	: RZ. KANO	2005.01.05
DESIGNED	: KH. HIDA	2005.01.05
DRAWN	: KH. HIDA	2005.01.05

DRAWING NO.	EDC-180297-00-00
PART NO.	MS-156R-NJ-1
CODE NO.	CL0358-0176-9-00

3 1/1

FORM HC0011-5