Jan.1.2026 Copyright 2026 HIROSE ELECTRIC CO., LTD. All Rights Reserved.
In case of consideration for using Automotive equipment / device which demand high reliability, kindly contact our sales window correspondents.

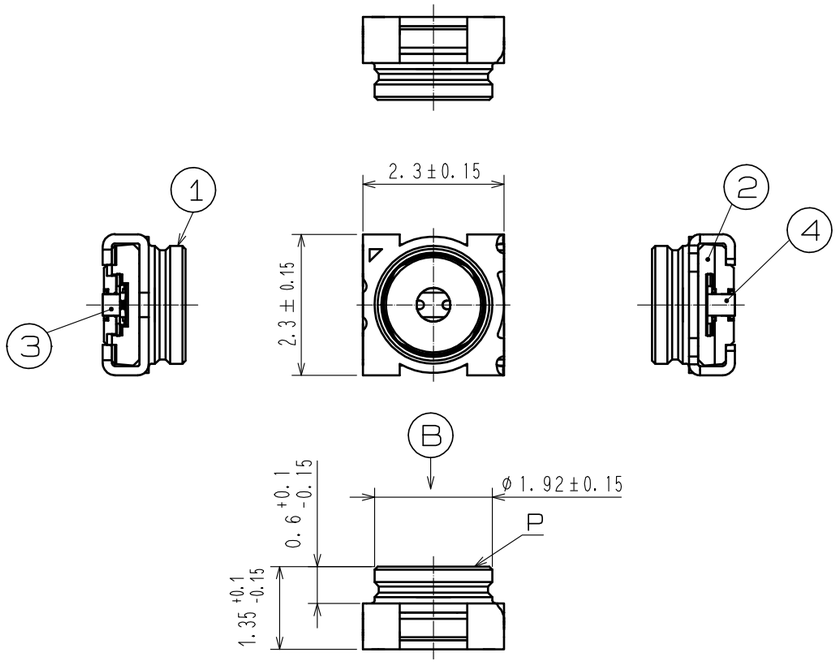


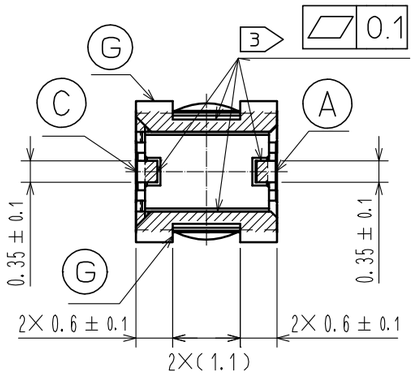


5 SPECIFIED PCB LAYOUT

5 SPECIFIED STENCIL PLATE

THICKNESS:0.1mm

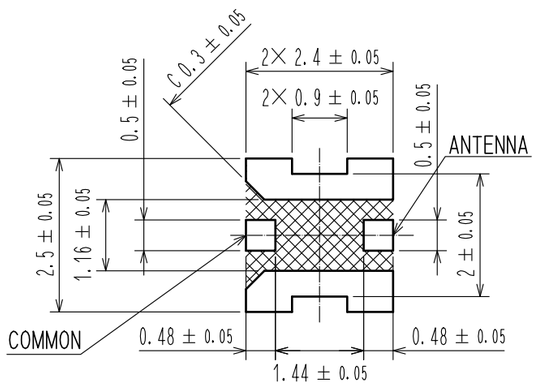


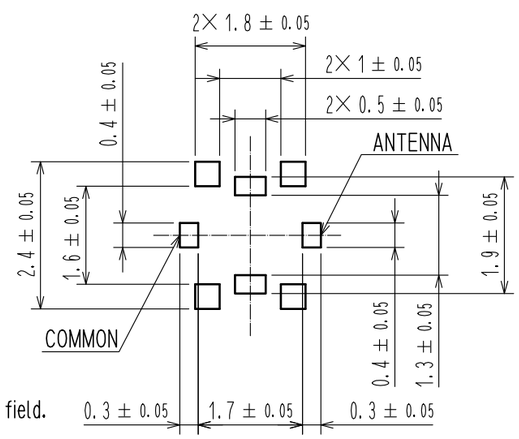


:This area must be free of conductive traces and resist field.

## RECOMMENDED REFLOW TEMPERATURE PROFILE

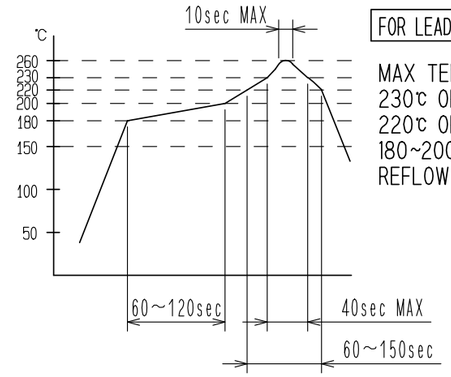


FOR LEAD-FREE SOLDER

MAX TEMPERATURE : 260℃ 10sec MAX
230℃ OR MORE : 40sec MAX
220℃ OR MORE : 60~150sec
180~200℃ : 60~120sec
REFLOW : 2 TIMES MAX 3

NOTE 1. Circuit shall be as follows.

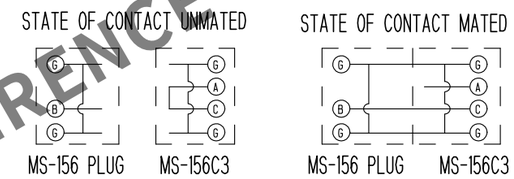


2. For use of this product, be sure to put contact area of plug on position P perpendicularly.
3. Lead co-planarity is to be 0.1mm MAX.
4. Do not use the washing process.
5. Please do not change the specified layout of the PCB dimension and the layout of the stencil plate dimension and thickness otherwise could not be responsible for the solderability of the product.
6. This product is intended to be used for circuit inspection only. Consult us if any other application is considered.
7. Do not use hand soldering for mounting of MS-156C3.

HALOGEN FREE COMPLIANT

HRS DRAWING FOR REFERENCE

| NO. | MATERIAL | FINISH , REMARKS | NO. | MATERIAL | FINISH , REMARKS |
|---|---|---|---|---|---|
| 3 | CU-NI-SI-ALLOY | SELECTIVE GOLD PLATING | 6 | PET | |
| 2 | PA-M | | 5 | PS | |
| 1 | PHOSPHOR BRONZE | GOLD PLATING | 4 | PHOSPHOR BRONZE | SELECTIVE GOLD PLATING |

| UNITS | SCALE | COUNT | DESCRIPTION OF REVISIONS | DESIGNED | CHECKED | DATE |
|---|---|---|---|---|---|---|
| mm | 10:1 | 3 1 | DIS-D-00014617 | MT. KANEKO | NK. NINOMIYA | 20230124 |

HIROSE ELECTRIC CO., LTD.

| | | | | |
|---|---|---|---|---|
| APPROVED | MH. YAMANE | 20140327 | DRAWING NO. | EDC3-350543-20 |
| CHECED | NK. NINOMIYA | 20140327 | PART NO. | MS-156C3(20) |
| DESIGNED | TS. NAKAGAWA | 20140326 | CODE NO. | CL0358-0340-0-20 |
| DRAWN | TS. NAKAGAWA | 20140326 | | 3 1/2 |

Jan.1.2026 Copyright 2026 HIROSE ELECTRIC CO., LTD. All Rights Reserved.
In case of consideration for using Automotive equipment / device which demand high reliability, kindly contact our sales window correspondents.

## PACKAGING SPECIFICATION

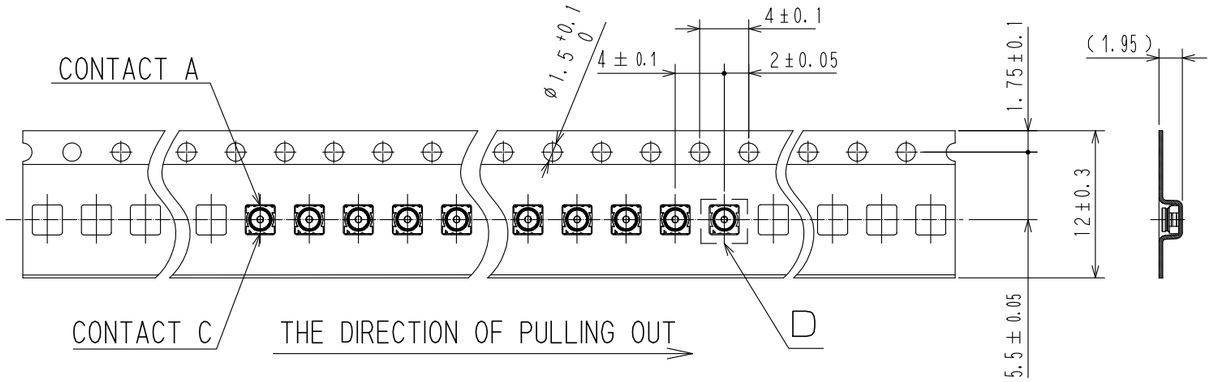


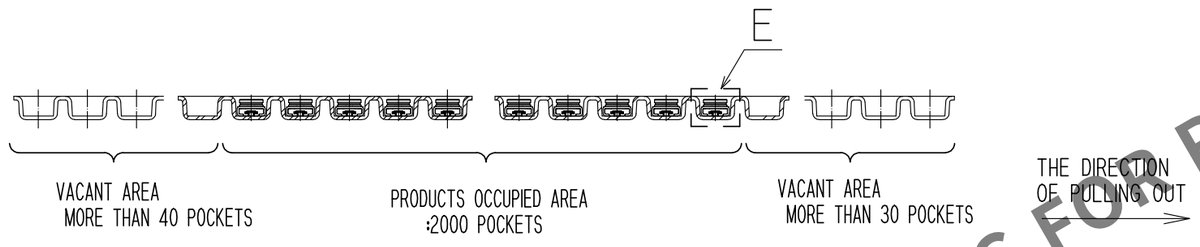


D (10:1)

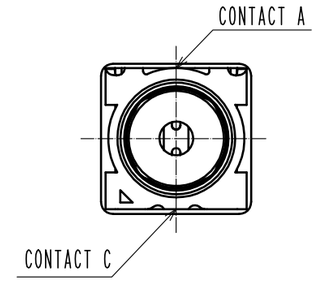


E(10:1)

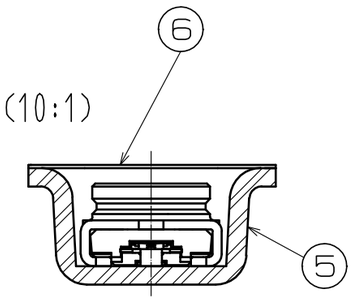


## REEL DIMENSIONS(FREE)

2000 PIECES PER REEL

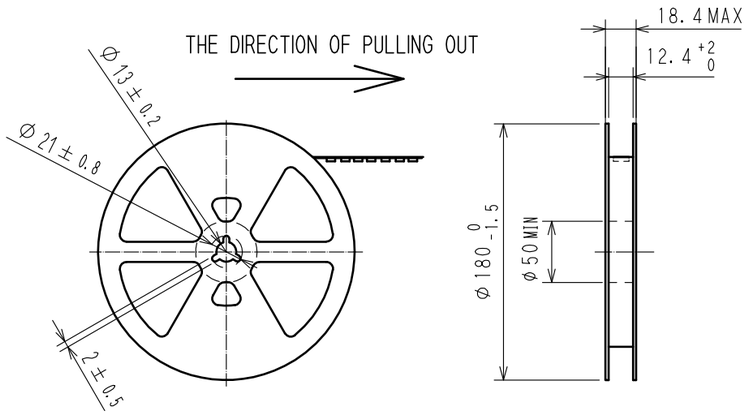


## OUTER PACKAGING CASE(FREE)

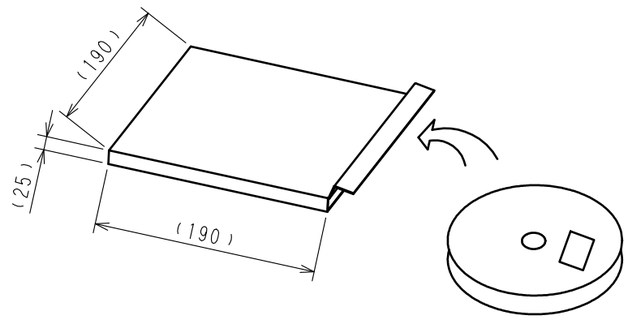


HRS DRAWING FOR REFERENCE

| | | |
|---|---|---|
| HRS | DRAWING NO. | EDC3-350543-20 |
| | PART NO. | MS-156C3(20) |
| | CODE NO. | CL0358-0340-0-20 |

3 2/2