Feb.1.2026 Copyright 2026 HIROSE ELECTRIC CO., LTD. All Rights Reserved.
In case of consideration for using Automotive equipment / device which demand high reliability, kindly contact our sales window correspondents.

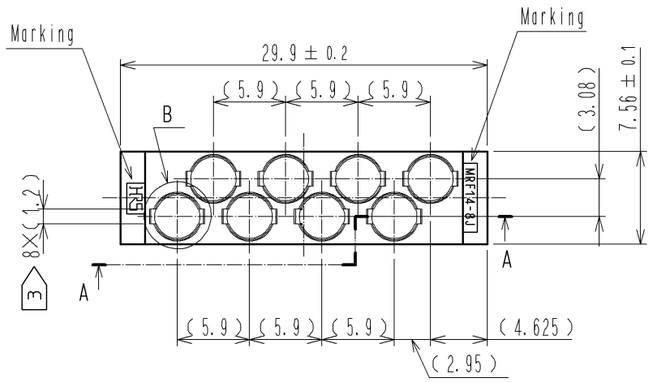

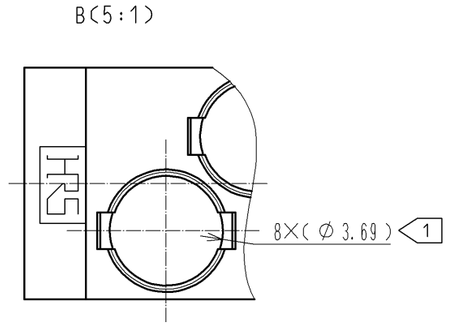

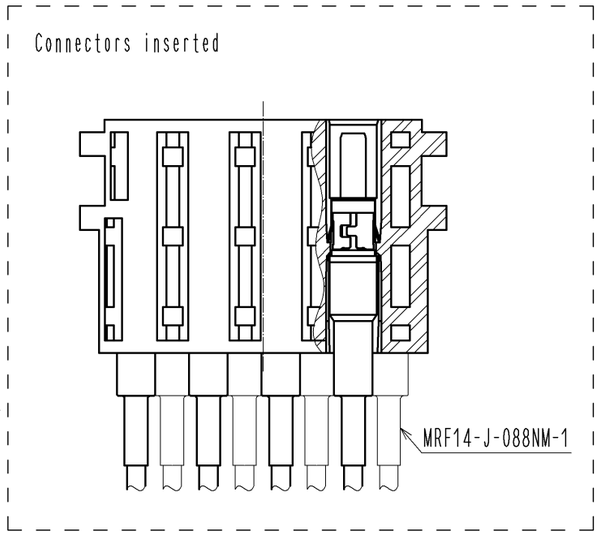

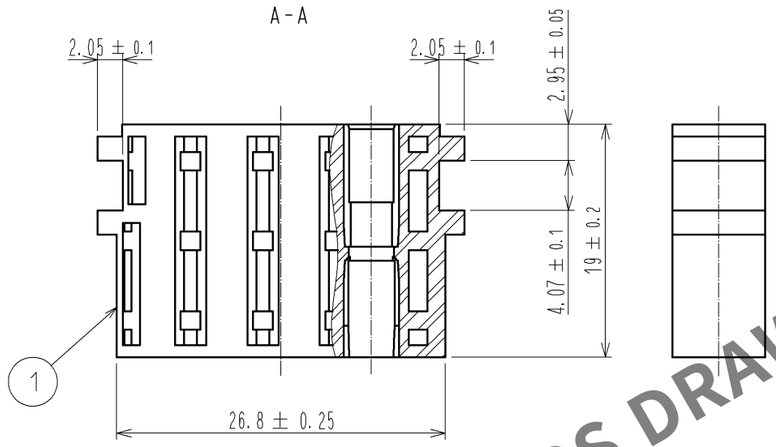

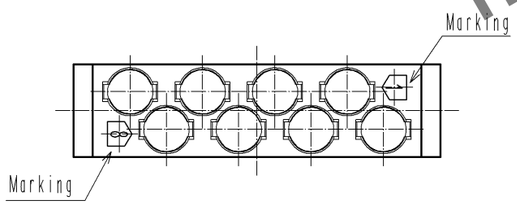

HRS DRAWING FOR REFERENCE

Notes 1 Coaxial connectors of MRF14-J-088NM-1(CL313-0715-0) are inserted into holes of ∅3.69.

2. This product shall be mated with MRF14-8P-CH (CL313-0721-3) without any failure, which conncetors of MRF14-P-088NM-1(CL313-0714-8) are inserted into.

3 The position is for inserting of Unmating tool.

RoHS COMPLIANT

NON-MAGNETIC

NO.	MATERIAL	FINISH , REMARKS	NO.	MATERIAL	FINISH , REMARKS
1	PBT	UL94V-0 (WHITE)			

UNITS	SCALE	COUNT	DESCRIPTION OF REVISIONS	DESIGNED	CHECKED	DATE
mm	2 : 1					

HIROSE ELECTRIC CO., LTD.

APPROVED	: KY. SHIMIZU	14. 08. 20	DRAWING NO.	EDC3-349223-81
CHECKED	: KY. SHIMIZU	14. 08. 20	PART NO.	MRF14-8J-CH
DESIGNED	: TM. YOSHIDA	14. 08. 18	CODE NO.	CL313-0722-6-00
DRAWN	: TM. YOSHIDA	14. 08. 18		1/1

FORM HC0011-5-7