Jan.1.2026 Copyright 2026 HIROSE ELECTRIC CO., LTD. All Rights Reserved.
In case of consideration for using Automotive equipment / device which demand high reliability, kindly contact our sales window correspondents.

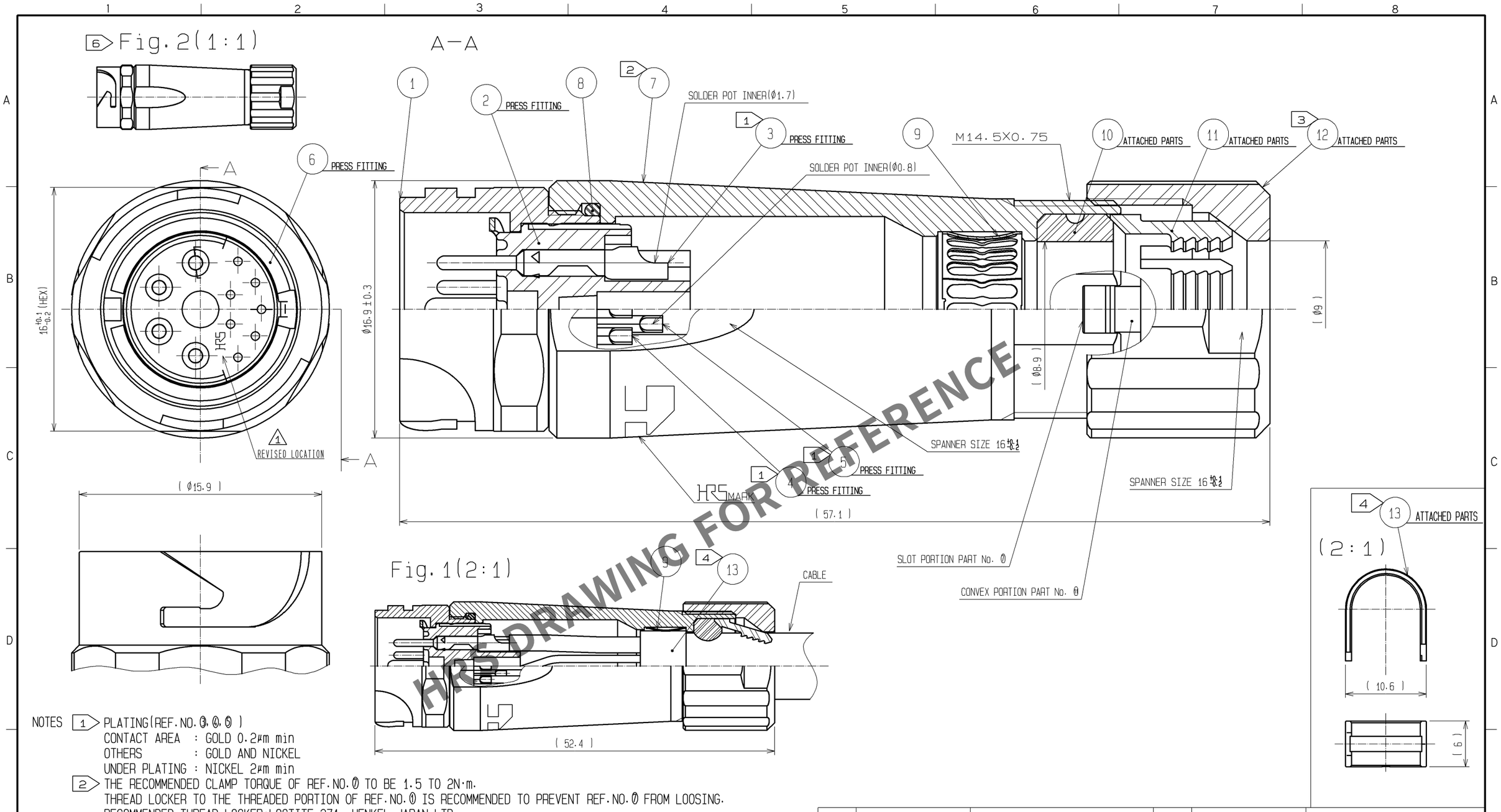

HRS DRAWING FOR REFERENCE

NOTES

1 PLATING(REF.NO.1,4,5)
CONTACT AREA : GOLD 0.2μm min
OTHERS : GOLD AND NICKEL
UNDER PLATING : NICKEL 2μm min

2 THE RECOMMENDED CLAMP TORQUE OF REF.NO.7 TO BE 1.5 TO 2N·m.
THREAD LOCKER TO THE THREADED PORTION OF REF.NO.1 IS RECOMMENDED TO PREVENT REF.NO.7 FROM LOOSING.
RECOMMENDED THREAD LOCKER:LOCTITE 271, HENKEL JAPAN LTD.

3 THE RECOMMENDED CLAMP TORQUE OF REF.NO.10 TO BE 1 TO 1.5N·m.
THREAD LOCKER AND LOCK PRIMER TO THE THREADED PORTION M14.5X0.75 OF REF.NO.7 IS RECOMMENDED TO PREVENT REF.NO.10 FROM LOOSING.
RECOMMENDED THREAD LOCKER AND LOCK PRIMER : LOCTITE 271, LOCK PRIMER 7649, HENKEL JAPAN LTD.

4 FASTEN REF.NO.13 TO THE CABLE WITH THE CABLE CRIMPING TOOL.
AND MAKE REF.NO.13 CONTACT WITH REF.NO.9 (REFER TO Fig.1).
REFER TO THE TECHNICAL SPECIFICATION ATAD-C0099 FOR DETAILS.
APPLICABLE CABLE CRIMPING TOOL : LF-TC-01 (CL150-0234-6)

5 APPLICABLE CABLE ASSEMBLY FIXTURE : LF13BJ-T01 (CL150-0238-7)
CABLE ASSEMBLY FIXTURE IS USED AS A RECEPTACLE STAND OF EXTRACT AND THE PART NUMBER 1 OF AN ASSEMBLY.

6 Fig.2 SHOWS THE APPEARANCE AFTER ASSEMBLY.

7 ROTATION EXAMPLES OF REF. NOS.7 AND 10 TO 1 ARE SHOWN.

NO.	MATERIAL	FINISH , REMARKS	NO.	MATERIAL	FINISH , REMARKS
7	ZINC ALLOY	NICKEL PLATING			
6	PHOSPHOR BRONZE	NICKEL PLATING	13	BRASS	NICKEL PLATING
5	COPPER ALLOY	1	12	PPS	(NATURAL, BROWN) UL94V-0
4	COPPER ALLOY	1	11	POLYAMIDE	(NATURAL, MILKY WHITE) UL94V-0
3	COPPER ALLOY	1	10	CHLOROPRENE RUBBER	(BLACK)
2	PPS	(BLACK) UL94V-0	9	PHOSPHOR BRONZE	NICKEL PLATING
1	ZINC ALLOY	NICKEL PLATING	8	CHLOROPRENE RUBBER	(BLACK)

UNITS	SCALE	COUNT	DESCRIPTION OF REVISIONS	DESIGNED	CHECKED	DATE
mm	4 : 1	1	DIS-C-000768	DS. MATSUNE	YH. YAMADA	08. 01. 08

HRS HIROSE ELECTRIC CO., LTD.

APPROVED	: MR. YOSHIDA	05. 01. 05	DRAWING NO.	EDC3-114404-00
CHECED	: MO. SATOH	05. 01. 05	PART NO.	LF13WBJ-11P
DESIGNED	: YH. YAMADA	05. 01. 05	CODE NO.	CL136-2011-6-00
DRAWN	: YH. YAMADA	05. 01. 05		1/1

FORM HC0011-5-7