Dec.1.2025 Copyright 2025 HIROSE ELECTRIC CO., LTD. All Rights Reserved.
In case of consideration for using Automotive equipment / device which demand high reliability, kindly contact our sales window correspondents.

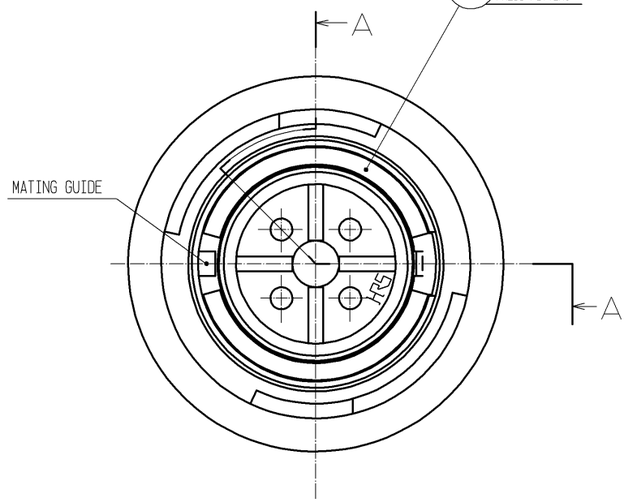

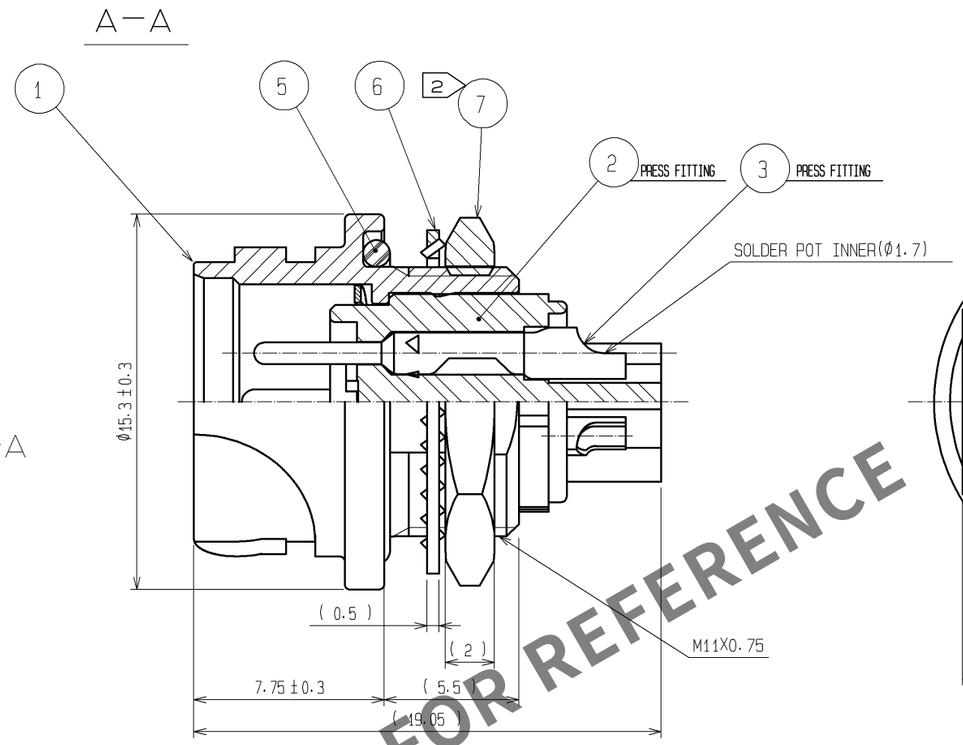

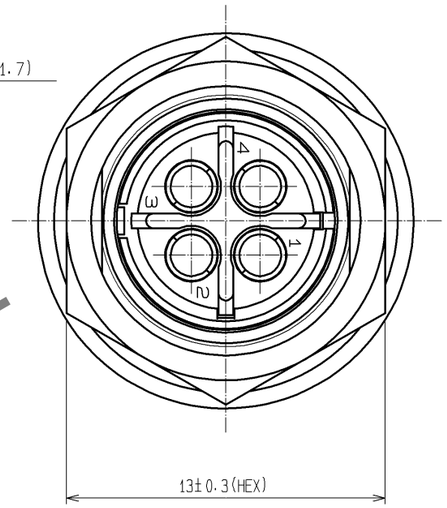

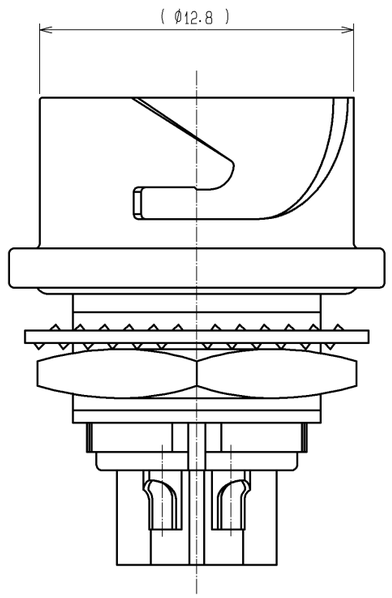

PANEL INSTALLATION HOLE
PANEL THICKNESS(0.7 TO 2)

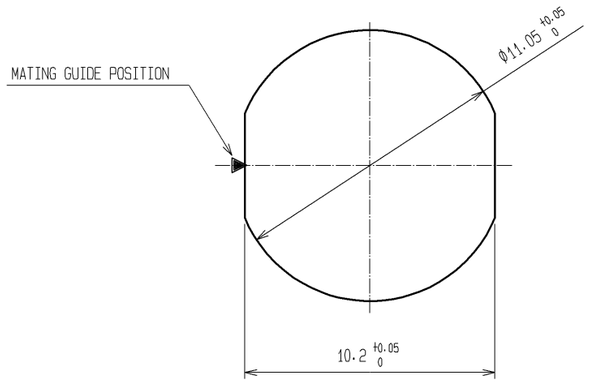

HRS DRAWING FOR REFERENCE

NOTES
1. PLATING(REF.NO. 3)
   CONTACT AREA : GOLD 0.2μm min
   OTHERS : GOLD OR NICKEL
   UNDER PLATING : NICKEL 2μm min
2. THE RECOMMENDED CLAMP TORQUE OF REF.NO. 7 TO BE 1.5 TO 2N·m.
   THREAD LOCKER TO THE THREADED PORTION OF REF.NO. 1 IS RECOMMENDED TO PREVENT REF.NO. 7 FROM LOOSING.
   RECOMMENDED THREAD LOCKER:LOCTITE 271, HENKEL JAPAN LTD.
3. WHEN THIS CONNECTOR IS MOUNTED ON TO PANEL, BE CAREFUL REF.NO. 5 IS ASSEMBLED SURELY INTO THE GROOVE OF REF.NO. 5 AS SHOWN IN THIS FIGURE TO KEEP WATERPROOF EFFECTIVENESS.

NO.	MATERIAL	FINISH, REMARKS	NO.	MATERIAL	FINISH, REMARKS
4	PHOSPHOR BRONZE	NICKEL PLATING			
3	COPPER ALLOY	1	7	BRASS	NICKEL PLATING
2	PPS	(BLACK) UL94V-0	6	PHOSPHOR BRONZE	NICKEL PLATING
1	ZINC ALLOY	BLACK CHROME PLATING	5	SILICONE RUBBER 1	(BLACK) 1 2

UNITS	SCALE	COUNT	DESCRIPTION OF REVISIONS	DESIGNED	CHECKED	DATE
mm	4 : 1	2 1	DIS-C-001551	TY. SUZUKI	HY. KISHI	10.01.07

HRS HIROSE ELECTRIC CO., LTD.

APPROVED	: MO. SATOH	09.01.14	DRAWING NO.	EDC3-114244-03
CHECKED	: HY. KOBAYASHI	09.01.14	PART NO.	LF10WBR-4P(03)
DESIGNED	: TY. SUZUKI	09.01.13		
DRAWN	: TY. SUZUKI	09.01.13	CODE NO.	CL136-1005-8-03 2 1

FORM HC0011-5-7