Jan.1.2026 Copyright 2026 HIROSE ELECTRIC CO., LTD. All Rights Reserved.
In case of consideration for using Automotive equipment / device which demand high reliability, kindly contact our sales window correspondents.

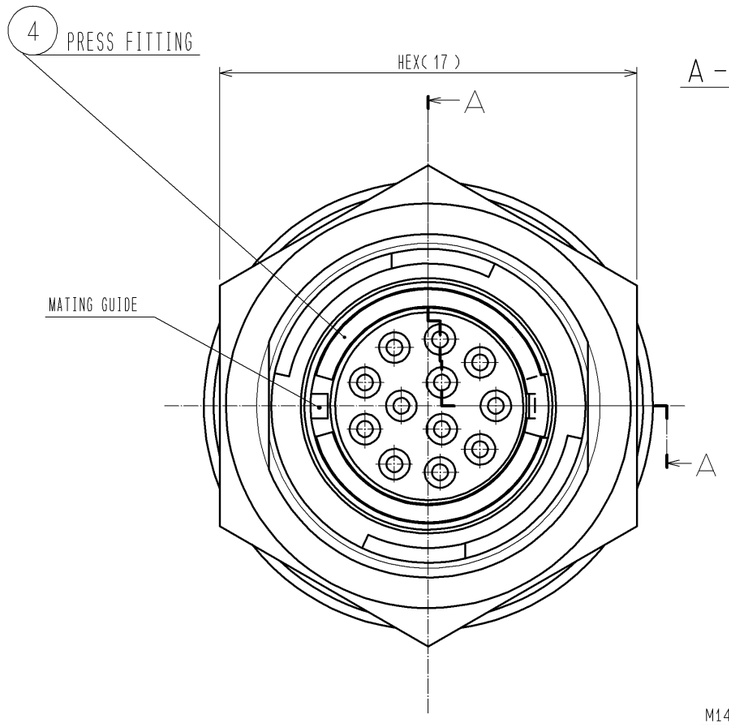

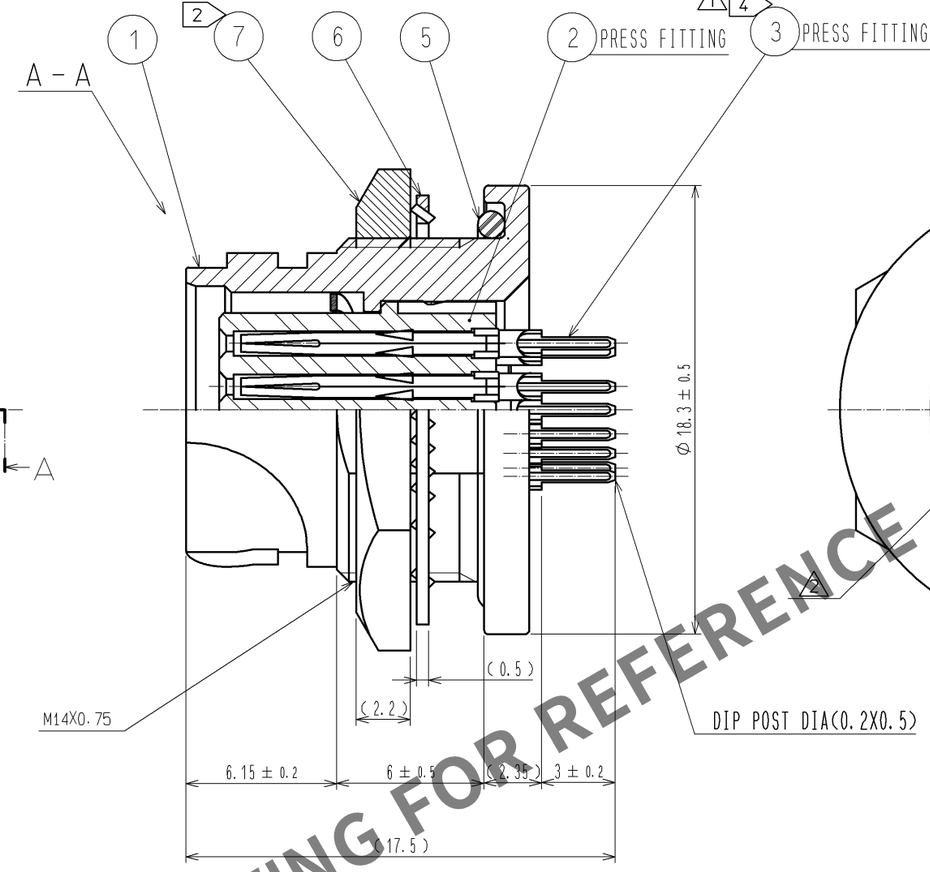

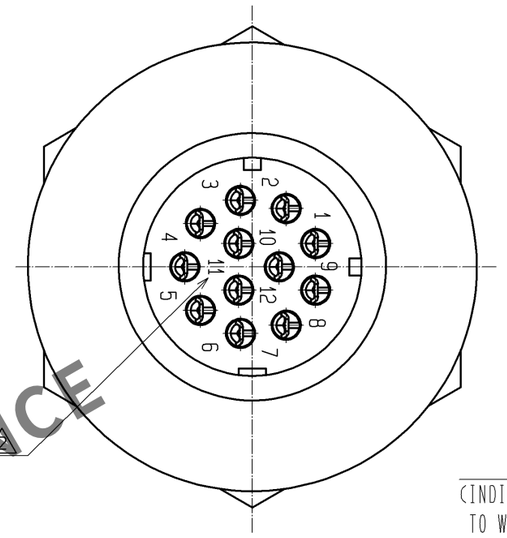

PCB LAYOUT
(INDICATES THE SIDE OF THE SURFACE TO WHICH DIP POSTS ARE INSERTED.)

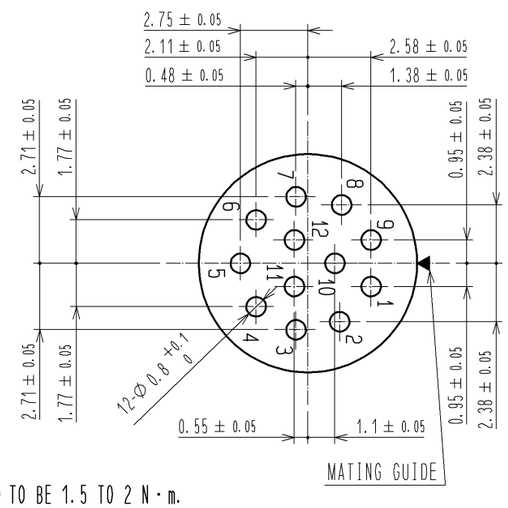

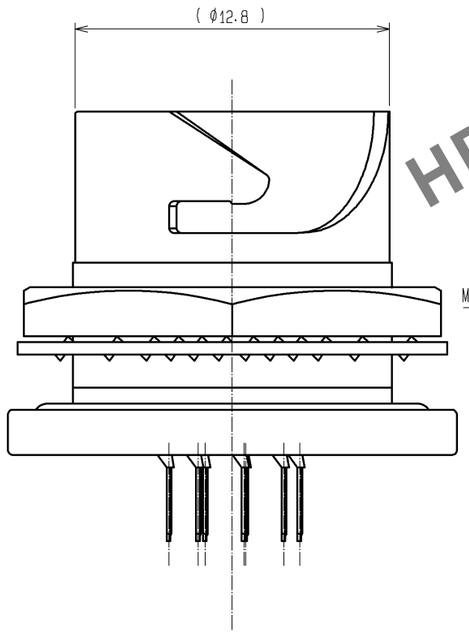

PANEL INSTALLATION HOLE
PANEL THICKNESS (0.7 TO 2)

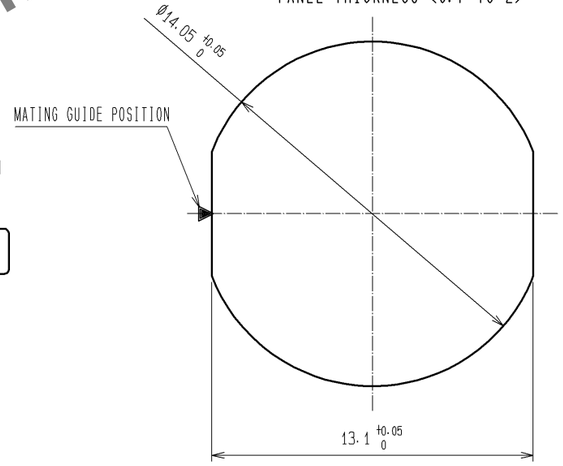

NOTES 1 PLATING(REF. NO. ③)
CONTACT AREA : GOLD 0.2μm min
DIP AREA : GOLD FLASH
UNDER PLATING : NICKEL 2μm min
2 THE RECOMMENDED THREADED TORQUE OF REF. NO. ⑦ TO BE 1.5 TO 2 N・m.
THREAD LOCKER TO THE THREADED POSITION OF REF. NO. ① IS RECOMMENDED TO PREVENT REF. NO. ⑦ FROM LOOSING.
RECOMMENDED THREAD LOCKER : LOCTITE 271, HENKEL JAPAN LTD.
3 WHEN THIS CONNECTOR IS MOUNTED ON TO PANEL, BE CAREFUL REF. NO. ⑤ IS ASSEMBLED SURELY INTO THE GLOOVE OF REF. NO. ⑤ AS SHOWN IN THIS FIGURE TO KEEP WATEERPROOF EFFECTIVENESS.
1 4 ROTATION EXAMPLE OF REF. NO. ③ ARE SHOWN.

NO.	MATERIAL	FINISH , REMARKS	NO.	MATERIAL	FINISH , REMARKS
4	PHOSPHOR BRONZE	NICKEL PLATING			
3	PHOSPHOR BRONZE	1	7	BRASS	NICKEL PLATING
2	PPS	(BLACK) UL94V-0	6	PHOSPHOR BRONZE	NICKEL PLATING
1	ZINC ALLOY	NICKEL PLATING	5	CHLOROPRENE RUBBER	(BLACK)

UNITS	SCALE	COUNT	DESCRIPTION OF REVISIONS	DESIGNED	CHECKED	DATE
mm	4 : 1	2 1	DIS-C-002180	HK. NAMAI	HY. KISHI	11. 05. 13

HRS HIROSE ELECTRIC CO., LTD.

APPROVED	: SU. OBARA	10. 01. 28	DRAWING NO.	EDC3-116787-00
CHECKED	: HY. KISHI	10. 01. 28	PART NO.	LF10WBRB-12SD
DESIGNED	: TY. SUZUKI	10. 01. 27	CODE NO.	CL136-1016-4-00
DRAWN	: TY. SUZUKI	10. 01. 27		2 1/1

HRS DRAWING FOR REFERENCE