Jan.1.2026 Copyright 2026 HIROSE ELECTRIC CO., LTD. All Rights Reserved.
In case of consideration for using Automotive equipment / device which demand high reliability, kindly contact our sales window correspondents.

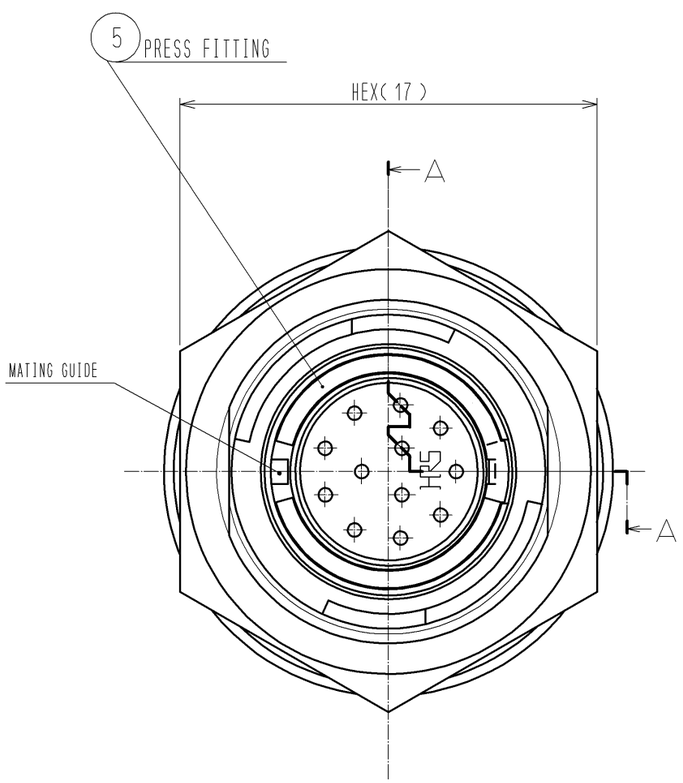

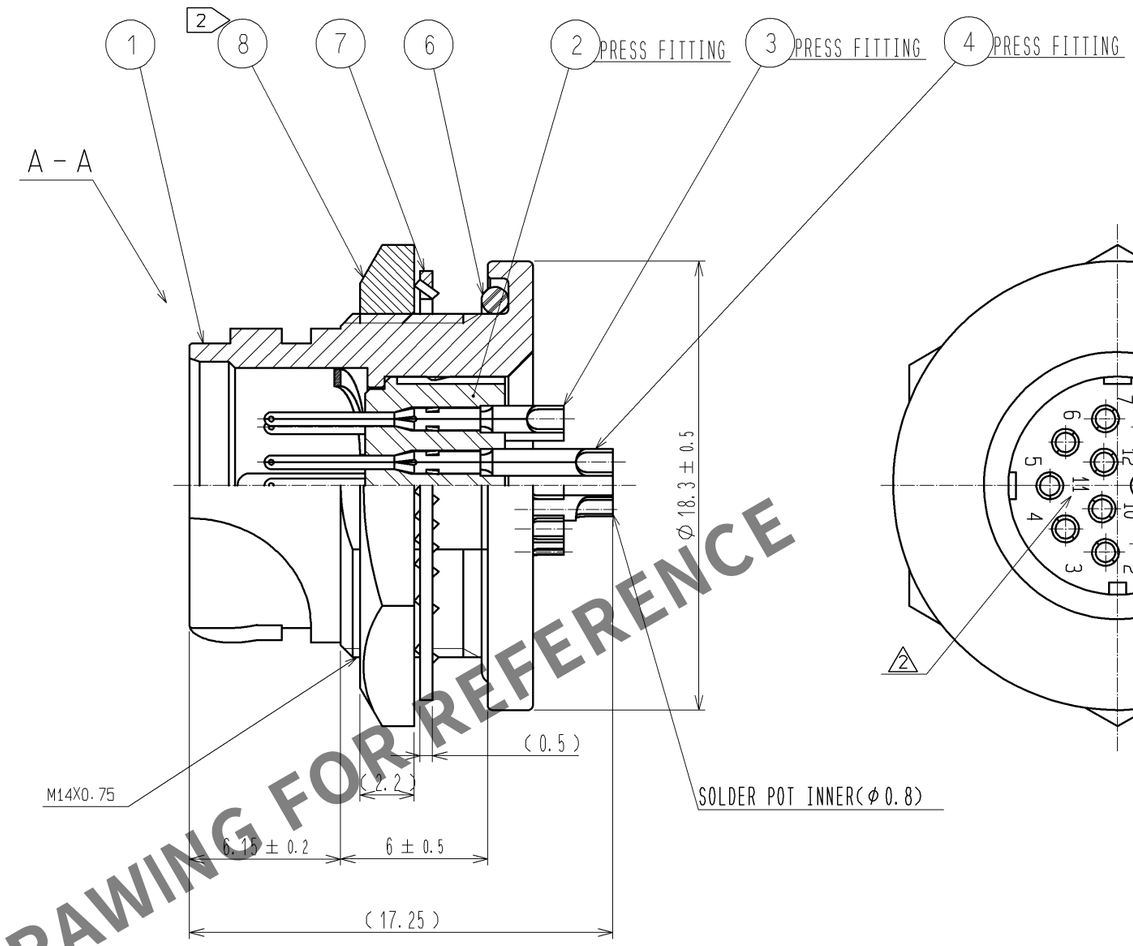

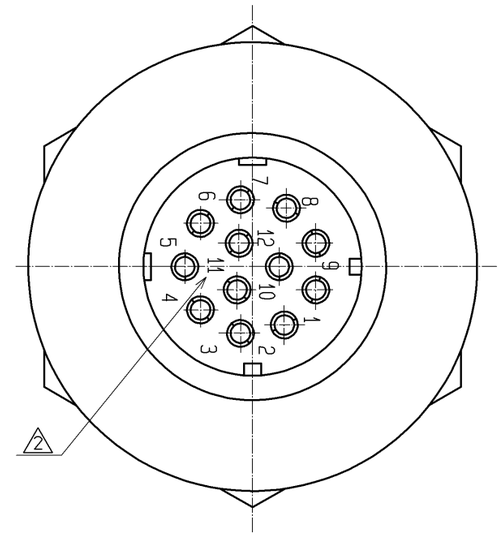

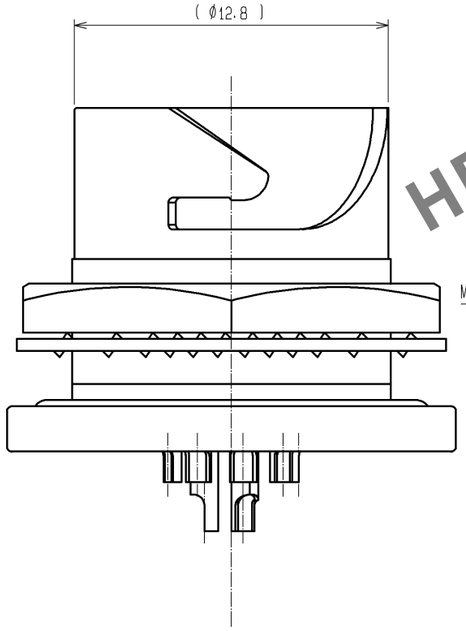

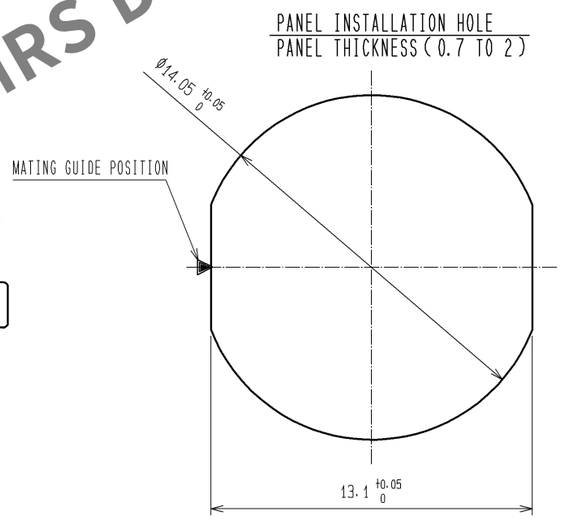

HRS DRAWING FOR REFERENCE

NOTES 1 PLATING (REF. NO. ③, ④)
CONTACT AREA : GOLD 0.2μm min
OTHERS : GOLD AND NICKEL
UNDER PLATING : NICKEL 2μm min

2 THE RECOMMENDED CLAMP TORQUE OF REF. NO. ① IS RECOMMENDED TO PREVENT REF. NO. ⑧ FROM LOOSING.
RECOMMENDED THREAD LOCKER : LOCTITE 271, HENKEL JAPAN LTD.

3 WHEN THIS CONNECTOR IS MOUNTES ON TO PANEL, BE CAREFUL REF. NO. ⑥ IS ASSSEMBLED SURELY INTO THE GROOVE OF REF. NO. ⑥AS SHOWN IN THIS FIGURE TO KEEP WATERPROOF EFFECTIVENESS.

△1 4 CORRESPONDING CONNECTOR : LF10WBP*-12S
DO NOT MATE LF10WBRB-12P TO LF10WBP*-12P.
IT MAY CAUSE FAILTURE SUCH AS CONTACT COMING OFF AND / OR CONNECTOR DEFORMATION.
(* IS REPLACED BY AN ALPHABET SUCH AS A, B, ・・・, OTHERWISE DELETED.)

NO.	MATERIAL	FINISH , REMARKS	NO.	MATERIAL	FINISH , REMARKS
4	COPPER ALLOY	1	8	BRASS	NICKEL PLATING
3	COPPER ALLOY	1	7	PHOSPHOR BRONZE	NICKEL PLATING
2	PPS	(BLACK) UL94V-0	6	CHLOROPRENE RUBBER	(BLACK)
1	ZINC ALLOY	NICKEL PLATING	5	PHOSPHOR BRONZE	NICKEL PLATING

UNITS	SCALE		COUNT	DESCRIPTION OF REVISIONS	DESIGNED	CHECKED	DATE
mm	4 : 1	2	1	DIS-C-002180	HK. NAMAI	HY. KISHI	11. 05. 13

HRS HIROSE ELECTRIC CO., LTD.

APPROVED	: MO. SATOH	08. 08. 22	DRAWING NO.	EDC3-116106-00
CHECKED	: HY. KOBAYASHI	08. 08. 22	PART NO.	LF10WBRB-12P
DESIGNED	: TY. SUZUKI	08. 08. 21		
DRAWN	: TY. SUZUKI	08. 08. 21	CODE NO.	CL136-1013-6-00 △2 1/1

FORM HC0011-5-7