Feb.1.2026 Copyright 2026 HIROSE ELECTRIC CO., LTD. All Rights Reserved.
In case of consideration for using Automotive equipment / device which demand high reliability, kindly contact our sales window correspondents.

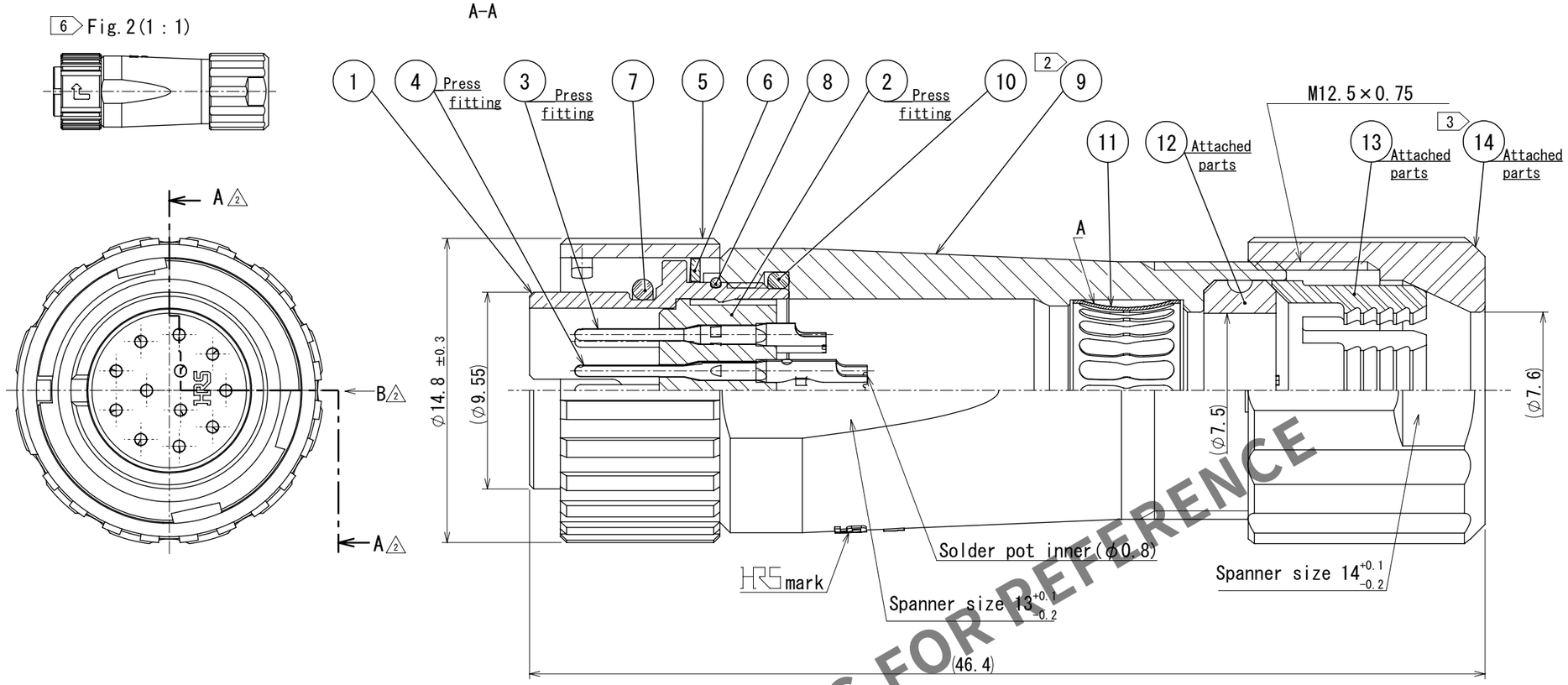

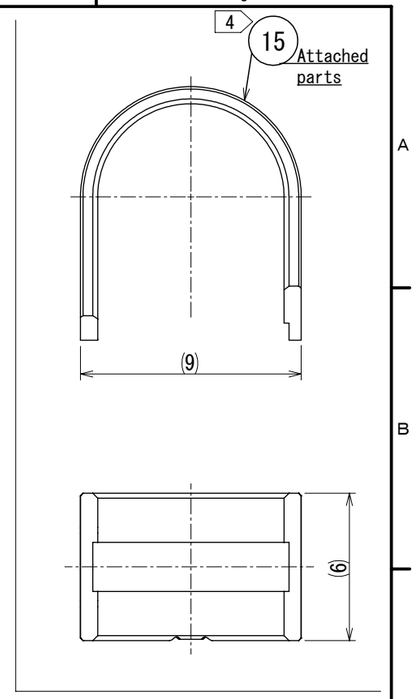

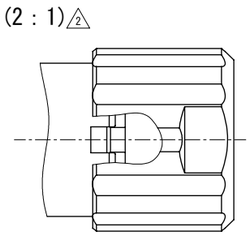

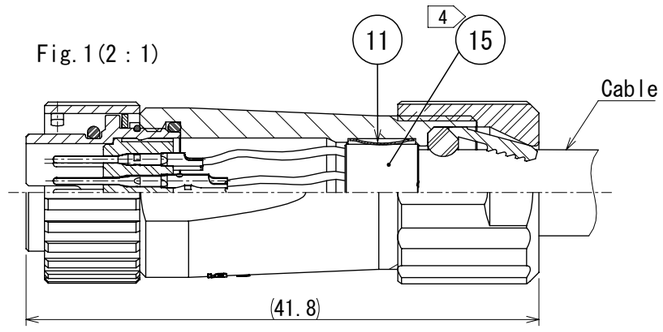

2 CAD change

HRS DRAWING FOR REFERENCE

Notes 1 Plating(Ref.No.③,④)
Contact area : Gold 0.2μm min.
Others : Gold and Nickel
Under plating : Nickel 2μm min.
2 The recommended clamp torque of Ref.No.⑨ to be 1 to 1.5N・m.
Thread locker to the threaded portion of Ref.No.① applies to prevent Ref.No.⑨ from loosing.
Recommended thread locker : Loctite 263, Henkel Japan Ltd.
3 The recommended clamp torque of Ref.No.⑭ to be 0.8 to 1N・m.
Thread locker and lock primer to the threaded portion M12.5×0.75 of Ref.No.⑨ applies to prevent Ref.No.⑭ from loosing.
Recommended thread locker and lock primer : Loctite 263, Lock primer 7649, Henkel Japan Ltd.
4 Fasten Ref.No.⑮ to the cable with the cable crimping tool.
And make Ref.No.⑮ contact with Ref.No.⑪(Refer to Fig.1).
Refer to the technical specification ETAD-C0099 for details.
Applicable cable crimping tool : LF-TC-01 (CL150-0234-6)
5 Applicable cable assembly fixture : LF10BP-T01 (CL150-0235-9)
Cable assembly fixture is used as a receptacle stand of extract and the part number ① of an assembly.
6 Fig.2 shows the appearance after assembly.
7 Rotation examples of Ref. Nos.⑤,⑨ and ⑭ to ① are shown.
8 Cable pull force,twisting strength,water tightness and other characteristics may differ depending on cable specifications and structure.
Please evaluate under the actual conditions prior to use.

NO.	MATERIAL	FINISH , REMARKS	NO.	MATERIAL	FINISH , REMARKS
8	Stainless steel				
7	Chloroprene rubber	(Black)	15	Brass	Nickel plating
6	Stainless steel		14	Polyphenylene sulfide	(Natural,Brown) UL94V-0
5	Zinc alloy	Nickel plating	13	Polyamide	(Natural,Milky white) UL94V-0
4	Copper alloy	1	12	Chloroprene rubber	(Black)
3	Copper alloy	1	11	Phosphor bronze	Nickel plating
2	Polyphenylene sulfide	(Black) UL94V-0	10	Chloroprene rubber	(Black)
1	Zinc alloy	Nickel plating	9	Zinc alloy	Nickel plating

UNITS mm	SCALE	COUNT	DESCRIPTION OF REVISIONS	DESIGNED	CHECKED	DATE
	4:1	2 5	DIS-C-00019715	YJ.KOGA	HY.KOBAYASHI	2025.06.06

HRS HIROSE ELECTRIC CO.,LTD.

APPROVED	HY.KOBAYASHI	2018.02.21
CHECKED	HY.KOBAYASHI	2018.02.21
DESIGNED	TY.SUZUKI	2018.02.21
DRAWN	HM.SAITO	2018.02.16

DRAWING NO. EDC-114243-31-00
PART NO. LF10WBP-12P(31)
CODE NO. CL0136-0008-0-31
2 1/1

FORM HC0011-5